GrandMaraisFinalMajorReconReport.doc

US Army Corps
of Engineers
Detroit District

Major Rehabilitation Evaluation Report

Grand Marais Harbor, Michigan

Section D – Pile Dike Breakwater

Prepared by:
U.S. Army Corps of Engineers
Detroit District
October 2003

MAJOR REHABILITATION EVALUATION REPORT
GRAND MARAIS HARBOR, MICHIGAN
SECTION D – PILE DIKE BREAKWATER
OCTOBER 2003

TABLE OF CONTENTS

MAJOR REHABILITATION EVALUATION REPORT
GRAND MARAIS HARBOR, MICHIGAN
SECTION D – PILE DIKE BREAKWATER
OCTOBER 2003

TABLE OF CONTENTS

APPENDIX

Appendix A – Design Analysis

Appendix B – Real Estate Plan

Appendix C – Correspondence Letters

MAJOR REHABILITATION EVALUATION REPORT
GRAND MARIAS HARBOR, MICHIGAN
SECTION D – PILE DIKE BREAKWATER
OCTOBER 2003

1. STUDY AUTHORITY

Section 104 (c), Small Navigation Projects, of the Water Resource Development Act of 1996 includes the following language:

Section 104. Small Navigation Projects

The Secretary shall conduct a study for each of the following projects and, if the Secretary determines that the project is feasible, may carry out the project under section 107 of the River and Harbor Act of 1960 (33 U.S.C. 577):

(c) Grand Marais Harbor Breakwater, Michigan – Project for navigation, Grand Marais Harbor breakwater, Michigan.

Operations and Maintenance, General, funds were appropriated in FY 2002 to conduct a major rehabilitation reevaluation of a breakwater at Grand Marais, Michigan. The appropriation language for this study was as follows: *"Grand Marais, Michigan – The Committee has provided $ 200,000 to conduct a major rehabilitation reevaluation of the harbor project at Grand Marais, Michigan".*

a) Federal Navigation Project

The River and Harbor Act, approved 14 June 1880, authorized the Federal Navigation Project at Grand Marais, Michigan. The Act provided for the construction of two parallel timber crib jetties, 500 feet apart. The construction of the jetties was initiated in 1883 and completed in 1903. The jetties extend into Lake Superior to the 20-foot depth contour. The River and Harbor Act was amended to include enclosing the harbor by constructing a 5,770-foot long timber pile breakwater. The breakwater or "pile dike" was constructed during the period 1895 to 1897. The outer 744 feet of the east pier was rebuilt with a reinforced concrete superstructure in 1950-51. The River and Harbor Act of 17 May 1950 provided for an 802-foot extension of the existing west pier consisting of rock and sand-filled steel sheet piling cells.

Pike Dike

The pile dike is identified as Section D of the navigation structures and was originally constructed (See Appendix A, Plate 3) of close-driven circular timber piles at an angle of 30 degrees. Stone reinforcement on the harbor side and a vertical piling provide support for the dike. The top width of the dike was 10-feet and its height was 4-feet above International Great Lakes Datum (1955) for Lake Superior, elevation 600-feet above Mean Water Level at Father Point, Quebec. The existing pile dike is in ruins and no longer functions as it was intended, which was to dissipate wave energy in order to reduce shoaling in the harbor. The last maintenance performed on the Pile Dike was in 1943. Since then the dike has deteriorated and has virtually disappeared. All that remains is an indeterminate amount of stone below water level. The timber has also disappeared with nothing visible above water.

Jetties

The navigation structures consist of 2 concrete and steel sheet pile jetties which form a channel providing safe entry to the natural harbor of Grand Marais. Grand Marais serves as a harbor-of-refuge. The east jetty is 1,695 feet long and the west jetty is 2,714 feet long. The existing harbor is complete except for widening the inner portion of the channel between the jetties to 500 feet. The project depth between the jetties is 18 feet (inner channel) and 20 feet (outer channel). The channel is maintained to 15 feet (inner channel) and 17 feet (outer channel). The east and west jetties were rehabilitated from 1969 to 1973.

Maintenance Dredging

The Federal navigation channel at Grand Marais, Michigan was last dredged in 1973 by the Dredge Hains, a hopper dredge. The quantity of dredged material (63,100 cubic yards) was placed in open water.

b) Major Rehabilitation Studies

Guidance for Major Rehabilitation Studies is provided in:

- *ER 1105-2-100, Planning Guidance Notebook, 22 April 2000;*
- *EP 1130-2-500, Project Operation Partners and Support (Work Management Guidance and Procedures), 27 December 1996;*
- *ER 1130-2-500, Project Operations Partners and Support (Work Management Policies), 27 December 1996.*

2. STUDY PURPOSE

The purpose of a major rehabilitation study is to establish the engineering condition of a structure and determine the need for reliability or efficiency improvements. The structure to be evaluated is a 5,770-foot long timber pile breakwater or "pile dike" identified as Section D of the navigation structures. The remainder of the Federal navigation project at Grand Marais has been maintained and is considered to be operating as intended.

Rehabilitation of a major project feature of a Corps operated and maintained facility is intended to improve the reliability of an existing structure and result in the deferral of capital expenditures to replace the structure. Rehabilitation would be considered if it could significantly extend the physical life of the project feature and can be economically justified by benefit-cost analysis. In order to consider rehabilitation of a Corps structure as an efficiency improvement, it must be shown that the operation of a major project component would be enhanced.

3. LOCATION AND DESCRIPTION

a) Location

Grand Marais Harbor is a natural deep water harbor located in Alger County, Michigan on the southern shore of Lake Superior about 93 miles west of Sault Ste. Marie and 75 miles east of Marquette, Michigan. The embayment at Grand Marais is comprised of a relatively deep basin on the west side (West Bay) extending into a shallow, marshy region of the east side (East Bay). The bay is about 2 miles long and one-half mile wide. See Appendix A, Plates 1and 2, respectively, for a location/vicinity map and for the existing plan view of Grand Marais Harbor of Refuge.

b) Non-Federal Sponsor

Burt Township, Alger County, Michigan has expressed an interest in becoming a cost sharing partner in the reconstruction of a breakwater type structure to replace Section D at Grand Marais, Michigan Harbor of Refuge.

c) Congressional Districts

The study area lies within the jurisdiction of the 1st Congressional District, MI. (Congressman Bart Stupak) and U.S. Senators Carl Levin and Debbie Stabehow.

4. PRIOR REPORTS AND EXISTING PROJECTS

a) Reviewed Reports

1) *Grand Marais Harbor, Michigan Reconnaissance Report on Reducing Future Maintenance, November 1978,* prepared by the U.S. Army Corps of Engineers, Detroit District. This study evaluated alternatives to reduce increasing maintenance costs and developed a plan to reduce future maintenance costs. It was determined that deterioration of the pile dike had resulted in the doubling of the accretion rate in West Bay and increased erosion of the lake bottom offshore of the pile dike, which may threaten the stability of the East Pier. The recommended mitigation plan for reducing future project maintenance consisted of the construction of a segmented rubble mound breakwater with four segments and an opening of 200 feet between the segments. The recommended breakwater, if constructed, would extend 1,600 feet southeast from the south end of the East Pier.

2) *Section 111, Final Environmental Impact Statement on Shore Damage, Grand Marais Harbor, Michigan, July 1980,* prepared by the U.S. Army Corps of Engineers, Detroit District. This study evaluated shore erosion damage. The study concluded that the Federal structures have contributed a very small portion of the shoreline erosion. This study concluded that about 67 percent of the erosion within the harbor would have occurred had not the navigation structures been constructed. The following plans were evaluated.

Non-Structural:	Structural:
No Mitigation Action	Restore bay to pre-project conditions
Shoreland Regulation	Construct a continuous revetment
	Construct protective beaches
	Establish sand-bypass program
	Construct detached breakwater (replace pile dike)
	Headland protection

A non-structural mitigation plan (Shoreland Regulation) was recommended and based on a lack of economic justification for structural alternatives. The non-structural recommendation was also based on a determination that the majority (67%) of erosion was classified as ambient. The Shoreland Regulation plan included the following points:

- Assist non-Federal agencies in establishing shoreline regulations;
- Establish erosion monitoring process;
- Develop a public information program;
- Utilize clean dredged material for beach nourishment;
- Insure future projects consider erosion mitigation works.

3) *Grand Marais Harbor Rehabilitation Design Alternatives, Final Report, 1 December 2000*, prepared for the Michigan Sea Grant College Program by Dr. Guy Meadows, Director, Ocean Engineering Lab, Department of Naval Architecture and Marine Engineering, University of Michigan. The goal of this study was to provide viable and long-term solutions to address the needs and uses of Grand Marais Harbor. This report evaluated the impacts of the blocking of along shore sediment flow from west to east by the existing west jetty. The report concluded that the west jetty acts as a wave barrier for storm waves approaching from the northwest and decreases the wave energy attack on the shoreline for a distance of about one mile to the east. This distance was determined to be dependent upon the actual incident wave direction and period. Beyond this area, the littoral drift was locally maximized with a potential for high erosion impacts. With regard to littoral transport, the report concluded that the material eroded from Lonesome Point and other areas is transported into West Bay and along the shoreline seaward of East Bay. This has resulted in deposition of material along the bay perimeter, as well as in deeper shoals.

Extensive field data was collected, including: hydrographic surveys, random access surveys, aerial photography, sediment collection and testing, and underwater inspection. Modeling of near shore processes was also accomplished.

The alternatives evaluated included those presented in the U.S. Army Corps of Engineers, Detroit District, reported entitled: *Section 111, Final Environmental Impact Statement on Shore Damage, Grand Marais Harbor, Michigan, July 1980,*

- No Mitigation Action;
- Shoreland Regulation;
- Restoration to pre-project conditions;
- Construction of a continuous revetment;
- Construction of protective beaches;
- Establishment of a sand-bypassing program;
- Construction of a detached breakwater (replace pile dike);
- Construct groin field;
- Headland protection.

Three (3) of the alternatives were evaluated in detail, those being no mitigation action, establishing a sand-bypassing program, and reconstruction of all or a portion of the original pile dike breakwater. The report concluded that reconstruction of Section D at 15-degree or 55-degree angles to the shoreline was the most practical and cost-effective solution to reduce the ongoing erosion and accretion processes.

4) *Grand Marias, Michigan Shoreline Monitoring Report, January 1993,* prepared by the U.S. Army Corps of Engineers, Detroit District. The purpose of this report was to reassess the erosion situation at Grand Marias, estimate the shoaling rate in the vicinity of the Federal navigation channel, and recommend solutions to the problems associated with accretion within the harbor. Local concerns included accretion at the west end of the bay, shoaling of West Bay, erosion of the south shore of the bay, and unsafe wave conditions in West Bay. Two (2) alternatives were recommended for mitigating accretion along the west shoreline of West Bay. The first alternative was to periodically dredge material from the marina vicinity. The second alternative was to construct a groin that would block the alongshore transport of sand and be located south of the marina.

This report also concluded the following:

- The Bay and coastline still are readjusting to the change in condition following the demise of Section D;
- Shoaling in the west basin would continue at an unknown rate between 1,000 - 25,000 cubic yards per year;
- The erosion at Kahle Park and Lonesome Point would continue;
- The offshore area east of the jetties would continue to deepen and the offshore contours would move landward until an equilibrium profile is reached. This would result in waves with higher energy within the bay.

5. PROJECT HISTORY[1]

a) Pre-Project Conditions

Grand Marais was once an inland lake, isolated from Lake Superior except for a channel, which served as an outlet for the Sucker River. The wave climate over time eroded material from the shoreline in the vicinity of Grand Marias Harbor and eventually eroded away the land separating the inland lake from Lake Superior. Two spits formed, one on the east side (Lonesome Point) and one on the west, which has continued to erode since the mid-1800's.

During the period 1880 to 1920 the logging industry located at Grand Marais reached its peak, and the harbor was important to the shipment of logs to markets on the south shores of the Great Lakes. However, by 1915 a large extent of the pine and hardwood forests had been clear-cut and the last sawmill was closed.

[1] *Grand Marais, Michigan Shoreline Monitoring Report, January 1993*

b) Post-Project Conditions

Construction of the Federal navigation project induced changes in the local littoral processes, with an accompanying change in the existing configuration of the bay. Two jetties were cut through the west spit, interrupting normal alongshore transport. An accretion fillet formed on the west side of the west jetty. The fillet as of 1993 extended over 1,000 feet lakeward of the pre-project shoreline and over one mile to the west. The tip of the west spit, cut off by the jetties, created Gull Island. The pile dike was completed in 1897 to provide protection from wave action within the bay for the logging industry. During the period when the dike was in good condition, waves diffracted through the channel, eroding the south shoreline directly across the bay from the entrance channel and on the north shore at Coast Guard Point. After 1939, the pile dike began to slowly deteriorate. By the mid-1950's the dike was in need of repair, but no economic justification could be found for the repairs since the termination of the logging industry. The dike had almost completely disintegrated by 1960; however, Gull Island was still in place, with little change, in 1962.

Deterioration of the dike gradually exposed the bay to waves from Lake Superior, resulting in increased wave action within the bay and increased accretion along the south shore. Material, which had been deposited in the vicinity of the dike and material, which formed Gull Island and Lonesome Point, began to redistribute within the bay. The available soundings show a dramatic recession of the offshore contours in the vicinity of the pile dike. Several million cubic yards of material that had accumulated landward and lakeward of the pile dike began to move landward into the bay. The movement of this material has resulted in the increased filling of the eastern half of West Bay and the landward movement and disappearance of Gull Island.

Prior to 1960, the eastern half of West Bay was roughly 50 feet deep. Gull Island was a large island 10 to 15 feet above the water surface at the western end of the dike. Following the demise of the pile dike, Gull Island began to rapidly erode and move southward toward the shoreline. By 1973, Gull Island was no longer visible. The deepest part of the eastern half of West Bay was rapidly reduced to a narrow basin that had completely filled in by 1991. The material that filled in the eastern half of West Bay came from Gull Island. The material that had accumulated around the pile dike came from the collapse of Lonesome Point.

During the early 1980's, the shoreline west of the jetties and the west accretion fillet appeared to be stable. The shoreline along West Bay, south of the jetties, was generally unchanged except for a reach of shoreline about 1,200 feet long which had accreted 30 to 60 feet. Further east along the south shore of West Bay the trend changed to erosion. A 2,000-foot reach of shoreline just west of Kahle Road had eroded 40 to 70 feet. There did not appear to be any erosion of the bluff along the south shore of West Bay during this period. The shoreline east of Kahle Road showed no significant change. A small spit of sand had formed just northeast of the mouth of the Sucker River. The Lonesome Point spit had grown about 50 feet westward. The shoreline for roughly 2,000 feet east of Lonesome Point had receded 20 to 40 feet and the bluff had receded about 10 feet. Further east, the shoreline and bluff show no measurable change during this period. The air photos, however, show a bare bluff face along the entire east shoreline with many fallen trees visible laying on the bluff face and toe. This is indicative of a bluff experiencing active erosion.

c) Period 1982 to 1992

Between 1982 and 1992 the coastline in the vicinity of Grand Marais continued to readjust to conditions following the demise of the pile dike. The rate of readjustment appeared to be slowing down as the available sources of material were used up and the coastline east of the harbor came into alignment perpendicular to the predominate wave direction.

The coastline at Lonesome Point continued to recede. The spit continued its collapse into the bay. Into the mid-1980's a spit was present at Lonesome Point extending across the bay. During this period, Lonesome Point no longer existed as a spit. Further east, the recession rate was roughly 180 feet over this period, or an average of 20.0 feet per year.

Further west, at Kahle Park, the shoreline continued to erode, but at a slower rate per year. From 1983 to 1984, the shoreline receded roughly 78 feet. From 1984 to 1987, the shoreline receded roughly 126 feet. From 1987 to 1992, the shoreline receded roughly 141 feet. Kahle Park has receded roughly 345 feet from 1983 to 1992, or about 38 feet per year on the average. Along the south shore of the bay, a comparison of shoreline positions showed that the beach is wider in 1992 than at any time during the prior 10 years. However, it was noted that this area has been quite dynamic in the past, alternating between period of accretion and erosion.

The shoreline in the vicinity of Carpenter Creek continued to accrete during this time period. This area had experienced erosion in the recent past; however, the large volume of material being carried along the south shoreline of the bay had reversed this trend, at least temporarily.

The material carried along the south shore towards the west continued to accumulate at the west end of the bay. From 1982 to 1992, the shoreline had expanded roughly 67 feet, or an average of 6.7 feet per year.

d) History of Maintenance and Rehabilitation

Major expenditures consisted of $ 632,293 during 1960-1962 for an 802-foot extension to the west jetty and a cost of $ 699,403 during 1969-73 for rehabilitation of the timber crib jetty structures. The cribs were capped with a concrete cover and reinforced where necessary with vertical piling.

The last maintenance performed on the pile dike consisted of the placement of 2,193 tons of stone reinforcement in 1938 and 3,400 tons in 1943. In 1950, field inspections revealed that the breakwater was deteriorating. Project reports for the next 20 years noted that repairs were necessary but that repairs could not be economically justified. The breakwater had almost entirely disintegrated by 1960.

Date	Construction and Rehabilitation History
1883-1885	Construction of 700-foot long portions of the east and west piers progressed during this time. It was a timber crib structure with a 20.5-foot width and was built on a stone blanket. Stone protection also was included in construction.
1885-1903	A 1,112-foot long portion of the west pier (a timber crib structure) was constructed during this period. It was 24.5 feet wide. The structure was built on a stone mattress and riprap was placed along the sides for toe protection.
1892	The inner 250-foot long portion of the east pier and 100-foot long portion of the west pier were completed. These were wood-pile structures filled with sand and stone. They were 12.5 feet wide with crest elevation of +6 feet above low water datum. Stone was placed on the channel side of the structures.
1893-1903	The outer 745-foot long portion of the east pier was constructed during this period. This was a 24-foot wide stone-filled timber crib structure. It was built on stone, and riprap was placed on each side of the structure.

1895-1897	A 5,770-foot long timber-pile dike (Section D) was constructed during this time. It was installed at an elevation of +4 feet above low water datum.
1905-1907	Stone reinforcement was added along the timber-pile dike built during 1895-97. The stone crest was 10-feet wide at an elevation of +4 feet above low water datum.
1914	Timber crib structures on the west pier were repaired. Crib walls were repaired with tie rods, and 425 tons of crib-fill stone was installed in the outer 500-feet portion of the pier.
1936-1942	Repairs were made to the east and west piers. These included replacing decaying, broken, or missing deck planking and replenishing crib-fill stone.
1950-1951	A concrete cap (superstructure) was installed on the east pier. The cap extended to an elevation of +6 feet above low water datum.
1960-1962	Construction of an 802-foot long cellular sheet-pile breakwater extension was completed at the lake-ward end of the west pier. The lake-ward 307 feet of the structure was constructed with 58.9-foot diameter cells, and the remaining portion was built with 46.1-foot diameter cells. The cells were filled with dredged fill material and capped with 3-ton cover stone. The crest elevation of the structure was +8 feet above low water datum. Riprap stone was placed around the toe of the cells.
1969-1973	Portions of the east and west piers were capped with concrete. The new superstructures extended to elevation of +7 feet above low water datum.
1986	The east and west piers underwent additional maintenance and were considered to be in fair condition. The pile dike was noted to be badly deteriorated and in ruins.

TABLE 1 – Expenditures for Maintenance and Rehabilitation					
Year	Spent	Repair	Maint	Rehab	S&A
* 1969	$1,631,095.00		$941,095.00	$690,000.00	
1970	$297,696.00			$262,820.00	$ 34,876.00
1971	$192,388.00			$175,364.00	$ 17,024.00
1972	$194,530.00			$114,215.00	$ 80,315.00
1973	$6,722.00			$4,523.00	$ 2,199.00
1974	$2,497.00		$2,497.00		
1975	$57,914.00	$57,914.00			
1976	$5,595.00		$5,595.00		
1977	$23,452.00	$7,727.00	$15,725.00		
1978	$7,365.00		$7,365.00		
1979	$214,130.00	$209,245.00	$4,885.00		
1980	$7,564.00		$7,564.00		
1989	$5,643.00		$5,643.00		
1990	$175,017.00	$167,362.00	$1,886.00		$ 5,769.00
1991	$663,290.00	$643,338.00	$8,747.00		$ 11,205.00
1992	$6,430.00	$1,137.00	$5,293.00		
1994	$11,838.00		$11,838.00		
1996	$10,240.00	$1,484.00	$8,756.00		
1997	$21,463.00		$21,463.00		
1998	$9,412.00		$9,412.00		
* Total expended during the life of the project up to 1969					

6. PLAN FORMULATION

a) National Objectives

1) The national objective of water and related land resources planning is to contribute to national economic development consistent with protecting the nation's environment, pursuant to national environmental statues, applicable executive orders, and other Federal planning requirements. Contributions to national economic development (NED) are increases in the net value of the national output of goods and services, expressed in monetary units. Contributions to NED are the direct net benefits that accrue in the planning area and the rest of the nation.

2) The following site evaluation and selection criteria were developed for evaluating navigation project alternatives:

- There is a strong likelihood of developing a technologically feasible and cost effective project, using proven technology;
- Economic resources within the study area are of demonstrated national, regional, or local significance;
- The Federal government may participate in improvements for navigation purposes if the accrued benefits are in excess of the estimated costs;
- There is a reasonable assurance that a public entity (i.e. state or local unit of government) is capable and willing to participate as a non-Federal sponsor(s) in a cost shared project.

b) Study Objectives

- Establish the overall engineering condition and reliability of the existing structure;
- Identify the operational and/or potential reliability problems and/or opportunities for efficiency improvement;
- Identify alternative methods to resolve or manage the problem;
- Develop cost estimates for the proposed solutions;
- Determine if a proposed project is eligible for funding under the major rehabilitation program;
- Estimate the total economic costs and benefits of the base condition and alternative solutions;
- Identify cost sharing requirements;
- Identify environmental concerns and complete environmental consideration reporting;
- Identify the recommended plan.

c) Public Concerns

Public concerns have been identified during the course of this evaluation. Additional input was received through coordination with the potential sponsor and some initial coordination with other regulatory agencies. The public concerns that are related to the establishment of the planning objectives and planning constraints are:

- Failure of Section D has had significant impact on the harbor due to shoaling caused by significant storms emanating from the northeast. This has led to a decrease in depths of the deep draft harbor inside the east end of West Bay;

- Loss of valuable aquatic habitat and significant shoreline changes;

- Decreased property values in erosion areas.

d) Sediment Budget

The Detroit District's *Grand Marias, Michigan, Shoreline Monitoring Report, January 1993,* provided the following sediment budget information in four time periods.

(1) **Sediment Budget prior to Jetty Construction** - 50,000 cubic yards per year of material entered the system from the west. About 25,000 cubic yards would by-pass the natural entrance to the bay and nourish down drift beaches. The remaining 25,000 cubic yards would fill within the bay, rather than form the fillet had the jetties not been constructed. The deficit created by the loss of the 25,000 cubic yards of sediment per year into the bay is made up by the erosion of 25,000 cubic yards per year of material to the east of the bay. In addition, 25,000 cubic yards of material is carried into the bay from the east, creating an additional deficit of 25,000 cubic yards per year on the east side of the bay. The total amount of the deficit is 50,000 cubic yards. This amount is eroded from the region east of the bay.

(2) **Sediment Budget after Jetty Construction (1883-1963)** - The same 50,000 cubic yards of material per year enters the system from the west. However, the material can no longer pass the point where the jetties were constructed. A portion of the material is impounded in the accretion fillet and a portion is trapped in the entrance channel. The rate of impoundment in the accretion fillet was calculated to be roughly 45,000 cubic yards with an additional 5,000 cubic yards deposited in the entrance channel. No material enters the bay from the west. The deficit east of the harbor is now 50,000 cubic yards per year. An additional 25,000 cubic yards per year is still transported towards the west; however, this material now accretes along the pile dike. The total deficit east of the harbor is now 75,000 cubic yards per year. This volume of material is eroded from the coastline east of the harbor, 50,000 cubic yards per year of which are transported out of the system towards the east.

(3) **Sediment Budget after failure of the Pile Dike (1963-1992)** - As before, 50,000 cubic yards per year enters the system from the west, with the same impoundment at the jetties occurring. The loss of the dike allowed West Bay to function as a sand trap. Material eroded from Lonesome Point and carried westward into the bay during reversals in littoral transport could not reenter the littoral stream. On the east side of the harbor, the same 75,000 cubic yards per year deficit exists. Since the general littoral climate on Lake Superior is assumed to be the same as before, 25,000 cubic yards per year would be transported to the west, with the remaining 50,000 cubic yards per year being transported out of the system to the east. Following the deterioration of the pile dike, the material that had accreted around the pile dike is redistributed. Over the preceding 80 years the pile dike had accreted roughly 2,000,000 cubic yards of material. Gull Island accounted for an additional 150,000 cubic yards. After the deterioration of the dike, Gull Island and all of the material accreted around the dike is carried into the bay. Lonesome Point recedes eastward several thousand feet. An additional 1,410,000 cubic yards of material is carried into the bay by the collapse of Lonesome Point. The 25,000 cubic yards of material per year previously carried westward and accreted around the dike now enters the bay again. The total volume material entering the bay during this period is roughly 4,310,000 cubic yards, or 143,700 cubic yards per year.

(4) **Sediment Budget for the Future (After 1992)**– The budget for the future is nearly the same as that following jetty construction except that the 25,000 cubic yards of material per year being transported to the west will enter the bay instead of being accreted along the pile dike.

e) Problems and Opportunities

The bay and coastline in the vicinity of Grand Marais Harbor continues to adjust to a change in conditions caused by natural erosion and accretion processes, the Federal harbor structures, and the failure of Section D.

Problems:

1) **Accretion of sediment at Grand Marais Harbor** (The following information was extracted from the Detroit District's *Grand Marias, Michigan, Shoreline Monitoring Report, January 1993).*

- **Jetties and Navigation Channel.** Accretion takes place along the Lake Superior coastline west of the jetties resulting in a fillet extending lakeward and some of this sediment passes around the jetties to the east side and into the Federal navigation channel. Material passes around the south end of the east jetty causing shoaling at the southeast end of the entrance channel. These shoaling conditions may result in additional maintenance dredging requirements in the navigation channel and the possibility of increased water depths alongside the east jetty caused by scour along the south end of the east jetty.

- **West Shoreline of West Bay.** Without intervention, sand carried alongshore will continue to accumulate at the west end of West Bay. Over the past 10 years, the shoreline has moved lakeward an average of 6.7 feet per year. This rate should continue, or even increase, over the next ten years as more material is pushed onshore at the east end of the bay. At some point, years in the future, the rate of material entering the bay should stabilize at about 25,000 cubic yards per year and the rate of growth of the beach should decrease and stabilize.

- **West Side of West Bay.** The western side of West Bay continues to slowly shoal. Material enters the west basin primarily from the east. From 1988 to 1993 the shoaling was accumulating at a rate of 0.2 feet/year. This represents roughly 5,000 cubic yards total over the five years. Between 1971 and 1987, there was no measurable shoaling. The bay is becoming smaller due to the widening of its beaches. Material enters the bay primarily from the east. Without intervention, West Bay will continue to slowly shoal. The rapid rate at which the eastern half of West Bay has shoaled is not an indicator of the expected shoaling rate of the west basin. As a minimum, it is expected that the shoaling rate of the west basin would continue at is present rate of 0.2 feet per year. At this rate, the west basin would approach the project depth of 18 feet in roughly 150 years. However, it is more likely that the shoaling rate will increase. It has been calculated that 25,000 cubic yards of material per year will enter the bay from the east. If all of this material is carried into the west basin, it would take a little over six years for the west basin to shoal to project depth. The 1993 report indicated that the available sounding data does not cover a sufficient length of time and does not cover enough of the west basin to permit an accurate prediction of the shoaling rate. This report also indicated that as the area offshore of the east side of West Bay continues to erode, water depths will increase and allow higher energy waves to enter the bay from the northeast. The 1993 report predicted that shoaling of the west basin will continue at an unknown rate between a minimum 1,000 cubic yards per year to a maximum of 25,000 cubic yards per year. The length of time for the west basin to shoal to the project depth of 18 feet below Low Water Datum is estimated to be from 6 to 150 years.

- **East Side of West Bay.** The average depth of the east side of West Bay is roughly 10 feet where it was once 50 feet. Conversely, areas near the pile dike are about 15 feet deep where it was once 15 feet above water (Gull Island). The 1993 report predicts that the area offshore of the east side of West Bay will continue to erode and water depths offshore will increase. Some of the material eroded from the offshore will be transported east, but most of the material will be pushed onshore or transported towards the west. At the time of the 1993 report, the offshore contours are nearly parallel to the shoreline and their distance offshore is roughly the same as on the open coast of Lake Superior. The deeper water offshore allows higher energy waves to reach the shoreline.

- **South Shoreline of West Bay.** The south shoreline of West Bay is accreting, however, as a balance between the erosive forces and the influx of material shifts, portions of the south shoreline should begin to erode. The Detroit District's *Grand Marias, Michigan, Shoreline Monitoring Report, January 1993,* also compared shoreline positions over the prior 10 years, which suggested that erosion occurring in the Kahle Park area would extend westward. The predicted erosion of this area will probably be due to northwest waves being diffracted around the jetties as well as northeast waves reaching the now unprotected shoreline. In addition, this area will begin to feel the adverse erosional effects of the blockage of littoral material from the west by the jetties. Further west, the shoreline in the vicinity of Carpenter Creek should continue to accrete or at least stabilize as material continues to be transported into this partially protected area from the east.

2) Erosion of sediment at Grand Marais Harbor (The following information was extracted from the Detroit District's *Grand Marias, Michigan, Shoreline Monitoring Report, January 1993).*

- **Kahle Park.** Kahle Park has been eroding steadily for the period 1982-1992 as the coastline realigned. The 1993 report indicates that severe erosion will continue in this area even after the shoreline has realigned due to the diffraction of waves around the jetties, the blockage of alongshore material by the jetties and its exposed location. The report indicated that the recession rate of Kahle Park has been about 345 feet over the past 10 years and would continue for the next 10 years, then begin to diminish.

- **Lonesome Point.** The 1993 report predicted that Lonesome Point will continue its severe erosion for the near future as it continues to realign. Recession rates averaging 20 feet per year in this area should continue for another 10 years or so, at which time the recession should begin to approach the long-term average rate of roughly 9 feet per year.

3) Unsafe wave conditions in West Bay Harbor (The following information was extracted from the Detroit District's *Grand Marias, Michigan, Shoreline Monitoring Report, January 1993).*

The deterioration of the Section D has resulted in deeper water in the vicinity the pile dike, which allows larger waves to access the shoreline. The 1993 report predicts that the offshore area east of the jetties will continue to deepen and the offshore contours would move landward until an equilibrium profile is reached, which will result in a high wave energy environment within the bay.

Opportunities

- **Reduce critical erosion and accretion impacts**

Specific areas within Grand Marais Harbor have been identified that are impacted by either erosion forces or accretion of littoral material. Structural alternatives are available which can reduce and/or eliminate the erosion and accretion impacts within the harbor.

There is an opportunity to restore fishery habitat. The MDNR has indicated that Grand Marais had a good fishery, but sand that is filling the deepwater basin (West Bay) and Sucker River has eliminated much of the spawning habitat, including rock and gravel substrate, and submerged vegetation. The sand has filled in deep parts of the Sucker River resulting in shallower depths and warmer temperatures in those impacted sections. The remnant deep-water area of the harbor still provides spawning in limited stone rocky areas (whitefish) and a few areas of submerged vegetation (Northern Pike and Perch and minnows).

Any implemented restoration alternative that, over time, reduced the accretion process in West Bay would allow the harbor to continue its use as a Harbor of Refuge. Without Grand Marais, light-draft vessels would be to navigate an approximately 89-mile stretch of Lake Superior's most dangerous waters without a place for refuge.

f) Planning Objectives

The water and related land resource problems and opportunities identified in this study are stated as specific planning objectives to provide focus for the formulation of alternatives. These planning objectives reflect the problems and opportunities and represent changes in the without project conditions. The planning objectives are specified as follows:

- To reduce erosion and accretion impacts as related to the demise of the Section D.

- To establish a clear link between implementation of restoration activities and subsequent measurable improvements

g) Planning Constraints

Unlike planning objectives that represent desired positive changes, planning constraints represent restrictions that should not be violated. The planning constraints are:

- The Grand Marais area has historically been a nesting place for the Great Lakes piping plover, a federally listed endangered species. Grand Marais is also included in the recent designation of critical habitat for the piping plover throughout the Great Lakes Basin. The U.S. Fish and Wildlife Service has indicated that any project that would further diminish the extent of piping plover habitat in Grand Marais, and particularly near the mouth of the Sucker River would be of concern.

h) Measures to Address Identified Planning Objectives

A management measure is a feature or activity at a site, which address one or more of the planning objectives. During the past 20 years a variety of measures have been evaluated both by the Detroit District, Corps of Engineer's and the University of Michigan. The Detroit District prepared the *Section 111 Final Environmental Impact Statement on Shore Damage at Grand Marais, Michigan, dated July 1980.* The University of Michigan prepared the *Final Report for Grand Marais Harbor Rehabilitation Design Alternatives, dated 1 December 2000.* Each proposed restoration measure was assessed and a determination made regarding whether it should be retained in the formulation of alternative plans. Most of the formulated alternatives in the Detroit District, Corps of Engineer report were found to be infeasible due to technical, economic, or environmental constraints. The Detroit District's Section 111 report, dated July 1980, recommended a non-structural plan involving shoreland restoration.

The *Final Report for Grand Marais Harbor Rehabilitation Design Alternatives, dated 1 December 2000, prepared by the University of Michigan (Dr. Guy Meadows)* recommended a structural alternative involving the replacement of Section D by a rubble mound structure constructed at 15-degree or 55-degree angles to the shoreline. These options would decrease shoaling of material within West Bay and decrease the loss of sediment along the shoreline in the vicinity of Lonesome Point. This University of Michigan based their recommendations on the reduction of shoaling and erosion within the harbor. The University of Michigan's report did not include an economic benefit-to-cost analysis. However, the University of Michigan plan meets the local communities desire to maintain and/or preserve the harbor.

By letter dated 12 January 2001, the Burt Township Board expressed support for the recommendation made in the University of Michigan study. The Burt Township Board has requested that reconstruction of the Section D be located along its original location as a first preference. However, the Burt Township Board indicated that in the event funding is limited the selection of a second option to reconstruct the breakwater along a line 15-degrees toward the shoreline from its original location would be acceptable to the community.

Alternatives for Reconstruction of Section D

Based on the results presented in the University of Michigan study and the recommendations made in the Burt Township letter, dated 12 January 2001, the alternatives that were evaluated in this study included various plans for the reconstruction of Section D.

All of the design alternatives involve the construction of a rubble mound structure offering varying amounts of usable harbor area. These rubble mound structures would consist of three layers of stone, each having different gradation, arranged in such a way that wave energy is absorbed and smaller stone is not lost.

Three different alignments for the rubble mound breakwater design have been considered (See Appendix A, Plate 4). Each orientation originates from the breakwater near the south end of the east jetty and ends approximately 100 feet from the ordinary high water mark. The reason for ending the breakwater short of the low water mark rather than tying into the shoreline is to prevent stagnation within the harbor and to reduce pedestrian traffic onto the breakwater from the shoreline. It is believed that pedestrian traffic onto the breakwater would negatively impact the piping plover along the shoreline.

Alternative 1 - Reconstruct a rubble mound breakwater next to the original alignment of Section D.

A new breakwater structure would be constructed on a line parallel to the original pile dike. The structure would extend 7,000 feet east shadowing the original breakwater and possibly using stone from the old structure. This alternative offers the most usable harbor area of the three structural alternatives considered. See Appendix A, Plate 5 for a cross-section of this alternative.

Based on a 20-year design wave height of 13.8 feet and a top of structure elevation of +7.0 feet above LWD, the armor stone for the rubble mound would range in size from 6 to 12 tons, with a majority of the stone being larger than 8 tons. The minimum layer thickness calculated for the armor stone is 9 feet and the crest would be 14 feet wide. The underlayer stone at this site would range between 1,100 and 2,100 pounds and would need to be a minimum of 4 feet thick. The core stone, or bedding stone would consist of a 2-foot layer of stone ranging in size from 4 pounds to 100 pounds.

Alternative 2 – Abandonment of the existing remnants of Section D and reconstruction of a rubble mound breakwater on an angle 15-degrees toward the shoreline from the original pile dike alignment. See Appendix A, Plate 6, for a cross-section of this alternative.

At an angle 15-degrees clockwise from the original pile dike the second design alternative would extend the new breakwater structure approximately 4,800 feet to the south shore just west of the entrance to the east bay.

Based on a 20-year design wave height of 10.7 feet and a top of structure elevation of +7.0 feet LWD, the armor stone for the rubble mound would range in size from 3 to 6 tons with a majority of the stone being larger that 7,500 pounds. The minimum layer thickness calculated for the armor stone is 7 feet and the crest would be 11 feet wide. The underlayer stone at this site would range between 500 and 1,000 pounds and would need to be a minimum of 3 feet thick. The core (bedding) stone would consist of a 2-ft layer of stone ranging in size from 2-50 pounds.

Alternative 3 – Abandonment of the existing remnants of Section D and reconstruction of a rubble mound breakwater at an angle 55-degrees toward the shoreline from the original pile dike alignment. See Appendix A, Plate 7, for a cross-section of this alternative.

The third orientation for the breakwater is at an angle of 55-degrees clockwise from the original pile dike alignment. This alignment would result in a 2,500-foot breakwater, which extends to the south shore just east of a large drop in elevation in the bay from approximately 7 to 53 feet.

Based on a 20-year design wave height of 8.7 feet and a top of structure elevation of +7.0 feet LWD, the armor stone for the rubblemound placed along the 55-degree breakwater alignment would range in size from 3,000 to 6,000 pounds with a majority of the stone being larger than 4,000 pounds. The minimum layer thickness calculated for the armor stone is 6 feet and the crest would be 9 feet wide. The underlayer stone at this site would range between 250 and 600 pounds and would need to be a minimum of 2.5 feet thick. The core stone, or bedding stone, would consist of a 2-foot layer of stone ranging in size from 1 pound to 20 pounds.

Alternative 4 – No Action.

The Corps of Engineers is required to consider the option of "No Action" as one of the alternatives in order to comply with the requirements of the National Environmental Policy Act (NEPA). No Action assumes that no project would be implemented by the Federal Government or by local interests to achieve the planning objectives. No Action, which is synonymous with the Without Project Condition, forms the basis from which all other alternative plans are measured.

The No Action alternative would minimize Federal project expenses while maintaining the harbor of refuge. If the No Action alternative is selected, then the erosion and shoaling processes would continue to impact the shoreline in the vicinity of Grand Marais Harbor. However, prior hydraulic analysis reporting indicates that the majority of these processes are ambient, and not induced by the Federal structures. This alternative would require no Federal expenditure, but would provide no benefits.

If No Action is taken, then the fishery at the harbor could continue to degrade. The MDNR has indicated that Grand Marais had a good fishery, but sand filling the deepwater basin has eliminated much of the spawning habitat, including rock and gravel substrate and submerged vegetation. The sand fill has changed the Sucker River from cold water to warmer.

i) Preliminary Plans

The harbor currently operates with the two original parallel jetties. The original timber pile dike identified as Section D has completely deteriorated. The timber pile dike is non-functional and fully submerged leaving the harbor vulnerable to storms and increased accretion and erosion processes.

A May 2002 site visit found no land access for construction of any of the alternatives. Therefore, it was assumed that construction would be marine based. This type of construction would require some dredging of the harbor to accommodate the draft required by the construction vessels. It was assumed that a channel of dimensions 50-feet wide and 10-feet below LWD would be needed.

All of the design alternatives involve the construction of a rubble mound structure offering varying amounts of usable harbor area. These rubble mound structures would consist of three layers of stone, each having different gradation, arranged in such a way that wave energy is absorbed and smaller stone is not lost. Rubble mound structures typically have relatively lower construction costs as compared to other design alternatives, however, maintenance costs tend to be higher. Another disadvantage to rubble mound structures is they allow for less usable area in the harbor that other types of structures.

j) Hydraulic Engineering Evaluation

The information obtained since 1993, including the University of Michigan report (2000), generally support the conclusions contained in the Corps of Engineers Detailed Project Report for Grand Marais Harbor (1980) and the Grand Marais Monitoring Report (1993). The projected shoaling rate for West Bay of between 1,000 and 25,000 cubic yards per year from the 1993 monitoring report still appears to be a reasonable estimate. The more recent bathymetric surveys, presented as Figure 2.2 in the University of Michigan report (2000) suggests that the shoaling rate within West Bay over the past decade has been at the lower end of the 1,000 to 25,000 cubic yard per year range.

Higher shoaling rates (on the order of 100,000 cubic yards per year) as well as the shoaling that has taken place at the eastern side of West Bay have been cited in each of the above referenced reports. This shoaling and the high shoaling rate occurred over a period of years following the demise of Section D. During this period, a redistribution of a large volume of accreted material occurred. The period of time under which this shoaling rate occurred was relatively short-term and the conditions that existed during that time do not represent the normal littoral transport climate.

k) Conclusions from the Preliminary Screening

Due to the lack of maintenance, the pile dike at Section D no longer functions as intended. The original pile dike now lies in ruins below water level. Consequently, efficiency improvements would not enhance the operation of major project components. Also, the pile dike breakwater is in such a degraded condition that no significant major project features remain to rehabilitate in order to improve reliability and defer capital expenditures to replace the structure.

If Section D were to be reconstructed under a Major Rehabilitation effort, then any of alternatives 1 thru 3 would decrease the sedimentation and erosion processes occurring along the shoreline of East and West Bay and restore the effectiveness of the structure. Alternative 3, Abandonment of the original pile dike and reconstruction of a rubble mound breakwater along a 55-degree angle to the shoreline would provide the highest benefit-to-cost ratio. However, the benefit-cost ratio is 0.62 and could not be approved for implementation. A benefit-to-cost ratio less that one normally indicates insufficient Federal interest and restricts a recommendation to proceed to the next phase of work.

7. FEDERAL INTEREST

a) Economic Evaluation

The harbor of Grand Marais has historically been used as a port of refuge from storms and high seas on Lake Superior. The harbor was originally authorized as a harbor of refuge by Congressional action on 17 May 1950. The following quote is from house document 751:

"The primary justification for improvement of this harbor is to prevent loss of life and property and to insure safe conditions for an established commerce. Reduction in loss of life and property, which is difficult to evaluate, is considered ample justification for an estimated annual carrying charge that would be incurred by the proposed modification."

"The harbor at Grand Marais was improved originally by the Federal Government to provide a harbor of refuge in the 89-mile dangerous reach between Whitefish Point, Michigan and Munising Harbor, Michigan. The harbor has been used as a refuge for all types of boats up to 350 feet in length."

In 1946 Congress authorized a plan providing for a continuous chain of harbors of refuge for light draft vessels along the entire Great Lakes. These harbors are located so that the maximum distance between them was no more than 30 to 40 miles. Facilities to be provided include only those required for reasonable accommodations. General navigation features include a safe entrance, protected anchorage and mooring areas. Justification for the improvement of the harbors rests upon the general benefits arising from utilizing the harbors as links in the general plan.

The Federal objective of water and related land resources planning is to contribute to national economic development (NED) consistent with protecting the Nations environment, in accordance with national environmental statutes, applicable executive orders, and other Federal planning requirements. Contributions to national economic development (NED outputs) are increases in the net value of the national output of goods and services expressed in monetary units, and are the direct net benefits that accrue in the planning area and the rest of the nation. Project outputs of Federal navigation features for small boat harbors are enhanced access to recreational boating, sport fishing opportunities, and commercial fishing activities. Estimating benefits for recreational activities involve the selecting of a method based on criteria outlined in guidance published within ER 1105-2-100. Additionally, charter fishing craft are considered commercial vessels and will be considered as commercial navigation benefits when project output is measured as changes in net income.

The above guidance states, " . . . change in net income measure of benefits is appropriate only for existing vessels currently using harbor facilities." The Burt Township Supervisor stated there are five chartered boat operations providing fishing and sightseeing cruises. It is presumed that the No Action alternative of minimally maintaining the harbor of refuge would be sufficient for the continued operation of chartered boats. If, however, this were not the case the opportunity cost of the No Action alternative would be the lost income from chartered operations. No specific charter boat financial statements were available so it was necessary to rely on 1994 Sea Grant New York research study. The study's title is: "New York's 1994 Great Lakes Charter Fishing Industry" and is the result of research funded by the National Oceanic and Atmospheric Administration Award #NA90AA-D-SG078. The responses of the study were used to compile average financial characteristics of the charter boat business and are the basis of estimating their contribution to Grand Marais Harbor. Grand Marais benefit from chartered boats is estimated to be $16,100 per annum. The average sales and cost amounts reported in the report are shown below and adjusted to current year dollars.

Criteria	Judgement Factors					Point Value
Recreation Experience TOTAL POINTS: 30	Two general activities 0-4	Several general activities 5-10	Several general activities: one high quality value activity 11-16	Several general activities; more than one high quality high activity 17-23	Numerous high quality value activities; some general activities 24-30	10
Availability of opportunity TOTAL POINTS: 18	Several within 1 hr. travel time; a few within 30 min. travel time 0-3	Several within 1 hr. travel time; none within 30 min. travel time 4-6	One or two within 1 hr. travel time; none within 45 min. travel time 7-10	None within 1 hr. travel time 11-14	None within 2 hr travel time 15-18	2
Carrying Capacity TOTAL POINTS: 14	Minimum facility for development for public health and safety 0-2	Basic facility to conduct activity(ies) 3-5	Adequate facilities to conduct without deterioration of the resource or activity experience 6-8	Optimum facilities to conduct activity at site potential 9-11	Ultimate facilities to achieve intent of selected alternative 12-14	5
Accessibility TOTAL POINTS:18	Limited access be any means to site or within site 0-3	Fair access, poor quality roads to site; limited access within site 4-6	Fair access, fair road to site; fair access, good roads within site 7-10	Good access, good roads to site; fair access, good roads within site 11-14	Good access, high standard road to site; good access within site 15-18	8
Environmental TOTAL POINTS: 20	Low esthetic factors that significantly lower quality 0-2	Average esthetic quality; factors exist that lower quality to minor degree 3-6	Above average esthetic quality; any limiting factors can be reasonable rectified 7-10	High esthetic quality; no factors exist that lower quality 11-15	Outstanding esthetic quality; no factors exist that lower quality 16-20	20
						45

Point Values	General Fishing and Hunting Values	
40	$6.16	
45	**$6.16**	$6.43
50	$6.70	

Recreation days		
Aggregate boat use 2002	2109	
Kayak Symposium	2800	
"Splash-in"	1500	
Skiing etc.	1825	
Sum Recreation days		8234
Recreation Benefit		$52,944.62
Rounded		$52,900.00

	1994	CPI	2003
Average Gross Fees	13,775	1.21	16,668
Average Operating cost	11,110	1.21	13,443
Net Cash flow	2,665	1.21	3,225
Number of Charters			5
Income to G.M. Harbor			16,123

The beneficial effects of project recreation were evaluated using the unit day value method based on the criteria specified in paragraph E-50b (4) of ER 1105-2-100. Under this method the estimated annual use over the project life relative to the without project condition provides the estimate of recreation benefits. These benefits are measured in terms of willingness to pay. A value for benefits is obtained by applying a unit day value to estimated use. No statistical study exists providing average annual use of Grand Marais Harbor. Burt Township provided boat use, event use, and daily activity use for 2002 that was used to estimate recreation days. Point values were applied to defined criteria and used to calculate the equivalent dollar value for unit day value. Economic Guidance Memorandum 02-04 specifies the range available for unit day values and Grand Marais recreation benefit is estimated to be: Recreation days include the three-day Splash-in event that consist of seaplanes and float plans visiting Grand Marais Harbor. It should be noted that though the event is included as a benefit, constructing a breakwater might be an obstacle to aircraft and render the harbor useless for this activity.

Commercial fishing benefits can be measured as the incremental change to net income due to the change in catch plus cost saving to current harvest. The State of Michigan's economic profile of Alger County report there was no employment or personal income in the fishing industry for 1999 and 2000. However, correspondence from Burt Township states that there is a tribal fishing enterprise. No information was available about the tribal commercial fishing enterprise based in Grand Marais. The Great Lakes Indian Fish and Wildlife Commission under the Lake Superior Fishery banner reports that most of the fishery is comprised of small boats but that a majority of the harvest is taken by large boats. The Department of the Interior Great Lakes Science Center has published commercial fishing reports for the years 1971 to 2000. These reports contain the total pounds and dollar value of commercial catch for the Great Lakes by year, lake, state and species. In addition the data is broken out by tribe and state license catch. The average annual tribal harvest for Lake Superior from 1991 to 2000 is 864,650 pounds at an average dollar value of $.865 (adjusted to the current price level). Given all the above information Grand Marais was assigned a value of ten percent of the total Lake Superior tribal catch. This was also used as the incremental change to measure benefits and was estimated at $73,200 per annum.

Three alternatives presented for the breakwater design are the original alignment, 15-degree, and 55-degree. Although no project is recommended in this report, project costs have been developed for use in the benefit-cost analysis and are described on page 33. Average annualized cost was calculated using a 50 year life and a 5 7/8% Federal Discount Rate. There were no positive net benefits for the three alternatives and the benefit/cost ratio for each came to 0.14, 0.26, and 0.62, respectfully. The below table excludes annual maintenance cost therefore the B/C ratio would be less than shown.

	Original Alignment	15-degree Alignment	55-degree Alignment
Working Cost	15,840,000	8,883,000	3,670,000
Annualized	$987,466	$553,766	$228,788
Rounded	$987,500	$553,800	$228,800
Benefits:			
Commercial fishing	73,200	73,200	73,200
Chartered Boats	16,123	16,123	16,123
Recreational: UDV	52,900	52,900	52,900
Benefits	142,223	142,223	142,223
Benefits less cost	(845,277)	(411,577)	(86,577)
B/C Ratio	0.14	0.26	0.62

The no action alternative from the Major Rehabilitation Evaluation Report is: "... minimize Federal project expenses while maintaining the harbor of refuge." The average annual expenditure for maintenance and rehabilitation at Grand Marais since 1980 has been $54,000. This amount is expressed in current year dollars by using the construction cost index. Basing future activity on historical expenditures the recommended NED plan is to continue the no action alternative.

b) Environmental Considerations

Grand Marais Harbor is a designated harbor of refuge on the south shore of Lake Superior in the eastern upper peninsula of Michigan. The harbor is protected from wind and wave impacts eminating from the west by Coast Guard Point. The River and Harbor Act of 1880 authorized construction of parallel timber crib piers extending through Coast Guard Point out to the 22-foot depth contour in the lake, and a closure of the eastern bay harbor entrance by a 5,770-foot-long pile dike breakwater extending from the piers eastward to Lonesome Point. As early as 1982 the pile dike breakwater was in a state of complete ruin. Loss of the breakwater resulted a mass sand movement into the harbor basin, which significantly reduced depths and restricts boating activity to remaining deepwater areas in the west half of the harbor. Additionally, since the breakwater fell apart, much of Lonesome Point has been lost to erosion. The nearest harbors to Grand Marais are Little Lake Harbor, 30 miles to the east, and Munising Harbor, about 35 miles west.

Alternatives - Breakwater rehabilitation alternatives being considered include 1) Original Alignment, 2) 15-Degree Alignment, and 3) 55-Degree Alignment, and 4) No Federal Action. All three of the action alternatives would be of rubble mound construction and would attach near the inner end of the east entry pier. Alternatives 2 and 3 would angle landward from the original alignment, thereby resulting in shorter lengths. The breakwater would be 7,000 feet long under Alternative 1; 4,800 feet long under Alternative 2; and 2,500 feet long under Alternative 3. While Alternative 1 follows the original breakwater alignment, it is 1,230 feet longer because the erosion of Lonesome Point has changed the shoreline. The no Federal action alternative serves as a baseline from which to compare the impacts of the action alternatives.

Alternatives 1, 2, and 3, would eliminate most sand deposition into West Bay by blocking shoreline sand movement from the east. Alternative 1 would include the Sucker River and both creeks behind the harbor structures; Alternatives 2 and 3 would only include the creeks. Under the No Action alternative sand would continue to deposit in the harbor area with the possibility that eventually the remaining deep-water area of the western harbor basin would be filled.

Fish and Wildlife Habitat - The Lake Superior shoreline at Grand Marais is a low sandy plain. To the west the shoreline rises rapidly, forming a substantial bluff leading into the Grand Sable Banks and Dunes a couple miles west of the harbor. On the east side of the harbor is another bluff in the vicinity of Lonesome Point. Behind Lonesome Point is East Bay, a small bay at the mouth of the Sucker River. Carpenter and Chipmunk Creeks drain into the main bay.

The beach in the project area is one of many areas recently designated as critical habitat for the piping plover (*Charadrius melodus*), which is Federally listed as endangered in the Great Lakes area. The U.S. Fish and Wildlife Service noted that Grand Marais is generally considered an important piping plover breeding area in Michigan (correspondence, March 20, 2002). They expressed concerns with the potential for project effects on plover habitat due to possible changes in erosion and accretion, and that a shore connection to the breakwater could affect piping plover through increased human traffic through the nesting areas. They also noted that the project could benefit piping plover if it stabilizes habitat or results in creation of new habitat.

Appropriately designed, none of the breakwater alternatives would be expected to have adverse impacts on plover habitat. Nor would the breakwaters be expected to exacerbate the current erosion at Lonesome Point. Breakwater construction on the original alignment (Alternative 1) potentially could result in some sand accretion at Lonesome Point. An offshore breakwater design would be considered to prevent increased human traffic through plover habitat. If an offshore breakwater were used, the design would have to consider the possibility of a sandbar land connection forming. Any of the breakwater rehabilitation alternatives would provide habitat for shorebirds on the breakwater and would create a calmer water area that could be used by waterfowl.

In a personal communication with the Newberry, Michigan, Department of Natural Resources office (July 23, 2002), a fish biologist indicated that the ongoing sand filling of the harbor basin has eliminated spawning runs up the Sucker River and filled in much fish spawning habitat, including rock and gravel substrate and submerged vegetation. The remnant deepwater area in the western end of the harbor still provides some spawning in limited stony/rocky areas (whitefish) and a few areas of submerged vegetation (northern pike and perch). Coho salmon, steelhead, smelt, suckers and minnows also are found in this part of the harbor. Any breakwater alignment would protect this remnant habitat from being filled in with sand and lost.

Project construction would result in some minor, short-term sediment suspension and noise, which would be a temporary disturbance to nearby shorebirds and fish. Fish and birds can avoid the immediate project site during construction. If construction activities are near active plover nesting and potentially could disrupt nesting activities, then construction of that portion of the project would have to be delayed until after the nesting season. Construction could begin at the opposite end of the breakwater so that areas nearer to plover habitat would be not be under construction until later in the season. Turbidity from project construction would be from the sandy bottom material and would settle quickly. This would not be expected to affect fish spawning activities. Any of the breakwater rehabilitation alternatives would provide a rubblemound artificial reef, which would serve as habitat for fish and other aquatic organisms.

Water and Sediment Quality - Lake Superior is classified as oligotrophic (low in nutrients and organic material) and has very good water quality. Water quality in the Grand Marais Harbor vicinity is generally excellent, since there are no major industrial influences and the area is not highly developed. Within the harbor there may be minor petrochemical residues from boat traffic and associate activities. Analysis of sediment samples collected for maintenance dredging at Grand Marais Harbor has not shown significant contamination. The breakwater construction area is in a wave-washed sand deposition area. Sand settles quickly and does not carry contaminants. Sand disturbed during breakwater construction would not adversely affect water quality.

Cultural Resources - The National Register of Historic Places and available shipwreck maps have been reviewed. No historic properties, items, sites, or shipwrecks are documented in the area under consideration for breakwater rehabilitation. A number of shipwrecks are noted as having sank outside Grand Marias Harbor, though it appears that none sank along the breakwater. The breakwater could be eligible for inclusion in the National Register of Historic Places solely based on its construction date (1895-1907); however, the massive deterioration that has occurred has left little of the original structure. The breakwater no longer retains integrity because of its dilapidated condition.

The breakwater alternatives were coordinated with the State Historic Preservation Office (SHPO). The SHPO stated in a letter of July 16, 2002, their opinion that "**no historic properties are affected** within the area of potential effects of this undertaking." They also noted, however, that the project site is an area of high archeological sensitivity and that it is possible that unrecorded shipwreck remains may be present near the former breakwater. If a shipwreck were discovered in one of the proposed breakwater alignments, then a different breakwater alignment could be implemented and/or the impacts on the shipwreck would have to be mitigated.

Recreation and Social Effects - Recreation and tourism are a large part of the local economy in the Grand Marais area. A variety of parks, campgrounds, winter sports areas, and historic and scenic sites are available in the Grand Marais vicinity, which is comprised mostly of forested lands. The most prominent recreational feature in the project vicinity is the Pictured Rocks National Lakeshore, which begins immediately west of Grand Marais and extends about 30 miles along the shore, nearly to Munising.

An important component of the Grand Marais economy is sport fishing, which has been restricted in extent by the continued sand filling of the harbor. The sand destroys fish habitat by covering it and, because it constantly shifts with currents, does not support any significant habitat. Ultimately, this filling would eliminate the remaining deepwater and vegetated fish habitat in the harbor. This likely would have significant adverse impacts on recreation and the local economy.

A breakwater rehabilitation project would benefit recreation by protecting the harbor basin from northeastern storms, providing calmer waters for small craft, would improve the safety of the harbor of refuge, and would sustain the remaining fishery and associated benefits to the local economy. Sport fishing may be improved with the presence of the rubblemound breakwater, which essentially is an artificial reef that would attract a variety of fish to the area.

8. Real Estate Plan

It is anticipated that none of the alternatives being considered, including no action, will require the non-federal sponsor to provide land for the Project. The three breakwater alternatives recommend construction of a breakwater in the navigation servitude. Temporary access and work areas will either be marine based or located on land owned by the federal government and under the administrative jurisdiction of the Corps of Engineers. Preliminary plans show public facilities or utilities will not require relocation. These findings indicate $0 value for Lands, Easements, Rights-of-Way, Relocations, and Disposal Areas (LREED's).

During the Feasibility phase, the Real Estate Division will develop detailed information on the Project's real estate requirements, participate in developing project alternatives, update the non-federal sponsor's legal and financial capabilities, and prepare a final Real Estate Plan for inclusion in the Feasibility Report.

A Real Estate Drawing is provided as Plate 8 in the Appendix B, Real Estate Plan. Also, provided in Appendix B are Plates 9 and 10, which are Department of Army Lease (Outgrant) information for Federal property at Grand Marais Harbor, Michigan.

No project is recommended in this report, however, if a project were to be implemented a Temporary Work and Storage area would likely be located on available Federal property at the harbor. The location for a Temporary Work and Storage area would be selected so as to not impact the existing outgrant leases at the harbor.

9. PRELIMINARY FINANCIAL ANALYSIS

a) No project is being recommended, however, in the event a navigation project were to be approved for study and implementation under Section 107 of the River and Harbor Act of 1960, the following is provided as a project cost summary.

PHASE	TOTAL COST	NON-FEDERAL	FEDERAL
Feasibility Study	$ 274,000	$ 87,000	$ 187,000
Plans & Specifications	109,000	54,500	54,500
Construction (55-deg Alt)	3,541,000	1,770,500	1,770,500
Total	$ 3,924,000	$ 1,912,000	$ 2,012,000

b) Non-Federal Requirements:

LERRD *	$ 0
Cash	$ 1,912,000
Work-in-kind	$ TBD
Annual O&M	$ 35,000

* LERRD's value = LERRD's cost ($ 0). All land required for the Project is either owned by the Federal government or subject to navigation servitude.

SUMMARY OF PROJECT COSTS (Note: No project is recommended in this report, however, these costs have been developed for use in the economic analysis and are provided here for information purposes):

Federal Allocations to Date for the Major Rehabilitation Report:	$ 107,500	(FY 2002)
	$ 15,000	(FY 2003)
Major Rehabilitation Evaluation Report	$ 122,500	
Feasibility Study	$ 274,000	
Plans and Specifications	$ 108,500	
Implementation (Construction)		
• Original Alignment	$ 15,840,000	
• 15-degree Alignment	$ 8,883,000	
• 55-degree Alignment	$ 3,670,000	

10. ASSUMPTIONS AND EXCEPTIONS

It is assumed that if a construction project were to occur, then construction would be accomplished by marine based equipment. This type of construction would require some dredging of the harbor to accommodate the draft required by the construction vessels. It was assumed that a 50-foot width channel would need to be dredged to a depth of 10.0 below low water datum.

Additional assumptions consider that dredging of the harbor, beyond the access needs for construction plant, and removal of the existing pile dike structure will not be necessary.

11. SCHEDULES

No project is being recommended, however, in the event a project were to be approved for study and implementation the following is provided as a schedule summary.

Phase	Duration	State Date	Finish Date
Feasibility Phase (FCSA&PSP)	18 Months	Apr 2004	Sep 2005
Plans and Specifications	6 Months	Oct 2005	Mar 2006
Project Cooperation Agreement	4 Months	Apr 2006	Jul 2006
Advertisement and Award	3 Months	Aug 2006	Oct 2006
Construction	18 Months	Nov 2006	Apr 2008

12. VIEWS OF OTHER RESOURCE AGENCIES

Because of the funding and time constraints of the reconnaissance phase, only limited and informal coordination has been conducted.

During the early phases of the reconnaissance study contact was made with a number of Federal, state, and local entities, which expressed interest in the study and provided information used in the development and formulation of the Major Rehabilitation Evaluation Report. The following points of contact have been made:

- Michigan State Historic Preservation Officer - By letter dated 16 July 2002 the Michigan SHPO indicated that no historic properties are affected by the proposed project to reconstruct Section D.

- U.S. Fish & Wildlife Service - By letter dated 20 March 2002, the USF&WS indicated that the Grand Marais area has been designated as critical habitat for the piping plover. Plovers nest along the Lake Superior shoreline west of the pier at the Coast Guard light station. The USF&WS has expressed concern about any project that would increase the level of human use of the area occupied by piping plover and diminish the extent of piping plover habitat in Grand Marais, and particularly near the mouth of the Sucker River. USF&WS also indicated that a thorough hydrologic modeling study should be undertaken to understand the long-term effects of proposed project to reconstruct Section D.

- The office of U.S. Senator Carl Levin by letter dated May 20, 2002 expressed interest in the continuation of a study to implement a project at Grand Marais to construct a breakwater to restore the harbors recreational and commercial use.

- Michigan Department of Natural Resources - The MDNR's Lansing, Michigan office (Hal Harrington) reviewed the preliminary proposals for reconstruction of Section D and by telephone conversation, dated 30 May 2002, recommended implementation of a project to reconstruct the dike along a 55-degree angle.

- Also, the MDNR's Newberry, Michigan Field Office (Jim Waybrant) indicated that Grand Marais had a good fishery, but sand that is filling the deepwater basin (West Bay) and Sucker River has eliminated much of the spawning habitat, including rock and gravel substrate, and submerged vegetation. The sand has filled in deep parts of the Sucker River resulting in shallower depths and warmer temperatures in those impacted sections. No significant spawning runs are known to remain in the river. The remnant deep-water area of the harbor still provides spawning in limited stone rocky areas (whitefish) and a few areas of submerged vegetation (Northern Pike and Perch and minnows). Also found in the basin are smelt, suckers, Coho salmon and steelhead. Any breakwater habitat alternative would protect this habitat. The fishery is the main income source at Grand Marais in the Summer.

13. RECOMMENDATIONS

Due to the level of funding provided, this report was scaled to an appropriate level to identify and evaluate the problems, opportunities, alternatives, benefits and costs derived for implementation of a project to reconstruct the pile dike, Section D, at Grand Marais Harbor, Michigan. Standard Major Rehabilitation Study tasks such as a reliability analysis, M-CASES cost estimate, Project Cooperation Agreement and Project Management Plan were not prepared.

This study evaluated the economic justification (Federal interest) for abandonment of the existing pile dike breakwater and reconstruction of a new breakwater structure. Federal interest for navigation projects must show economic feasibility, compliance with current regulations and policies, and that a willing and financially capable local sponsor can be found. The benefits-to-cost analysis has indicated that for all alternatives, except No Action, the benefit-to-cost ratio is less than 1. There is no Federal interest to participate in a project to reconstruct the Section D pile dike.

Although this report recommends No Action, the FY 2003 Federal Budget (O&M, General) included an appropriation of $ 175,000 for Grand Marais, Michigan with report language requesting initiation of a design to replace the existing breakwater. Design work has been initiated. It is recommended that design work continue until all Congressionally appropriated funds have been expended. In the event that a project is approved for implementation, this report would recommend the selection of the alternative that proposes abandonment of Section D and reconstruction of a rubble mound breakwater along a 55-degree angle from the original location of the pile dike. This alternative had the highest ratio of benefits-to-cost.

APPENDIX A

DESIGN ANALYSIS

RECONNAISANCE REPORT

for

HARBOR OF REFUGE

GRAND MARAIS, MICHIGAN

Prepared by

U.S. ARMY CORPS OF ENGINEERS
DETROIT DISTRICT
JUNE 2002

Reconnaissance Report
For
Harbor of Refuge
Grand Marais, Michigan

Table of Contents

1. General Information

1.1 Introduction: This preliminary design was performed in order to determine the most cost effective method for rehabilitating the harbor of refuge in Grand Marais, Michigan along the southern shoreline of Lake Superior. The harbor is experiencing problems with sediment accretion. In December 2000, the University of Michigan (U of M) Ocean Engineering Laboratory completed a report titled Grand Marais Harbor Rehabilitation Design Alternatives (Report OEL-2001) prepared for Michigan Sea Grant College Program. The U of M report refined prospective design alternatives from The U.S. Army Corps of Engineers (USACE) Section 111 study for Grand Marais 1980. At the request of Planning Branch, this report only considers those alternatives discussed in the U of M study. The alternatives are referred to as the Original Alignment Alternative, the 15-Degree Alternative and the 55-Degree Alternative. Information regarding existing conditions was obtained from past reports and a May 2002 site visit.

1.2 Background: Grand Marais Harbor is a natural deep water harbor on the southern shore of Lake Superior in Alger County, Michigan (see Plate 1 for location and vicinity maps). In 1903, Grand Marais Harbor became an official harbor of refuge under the River and Harbor Acts of June 14, 1880 and May 17, 1950 (Reference 1). The Harbor currently operates with the two original parallel jetties, but the original timber pile breakwater has completely deteriorated (see Plates 2 and 3 for existing plan and cross section). The breakwater is non-functional and fully submerged leaving the harbor vulnerable to storms and sediment accretion. Without Grand Marais Harbor, light-draft vessels will be forced to navigate a 71-mile stretch of Lake Superior's most dangerous waters without a place for refuge (Reference 2). By Congressional order the USACE has been requested to consider constructing a breakwater, which is cost effective and will maintain the Grand Marais Harbor as a harbor of refuge.

2. Design Alternative As previously mentioned, all design alternatives would involve the construction of a rubblemound structure offering varying amounts of usable harbor area. These rubblemound structures would consist of three layers of stone, each having a different gradation, arranged in such a way that wave energy is absorbed and smaller stone is not lost. Rubblemound structures typically have relatively lower construction costs as compared to other design alternatives. However, maintenance costs tend to be higher. Another disadvantage to rubblemound structures is they allow for less usable area in the harbor than other types of structures.

3. Design

3.1 General: Coastal design procedures developed by the USACE in the Shore Protection Manual (Reference 1) and engineering and design manual "Design of Breakwaters and Jetties" are being used for design of the harbor repairs.

3.2 Topographical and Geotechnical: All topographical and geotechnical data was acquired from previous studies. Prior to final design and soil borings in the vicinity of the new breakwater would be required.

3.3 Layout/Orientation: Three different alignments for the rubblemound breakwater design have been considered (see Plate 4). Each orientation originates the breakwater at the south end of the east jetty and ends approximately 100 feet from the ordinary low water mark. The reason for ending the breakwaters short of the low water mark rather than tying them into the shoreline is to prevent stagnation within the harbor.

3.3.1 Original Alignment Alternative: The first design option for the orientation of the breakwater would be in a line parallel to the original breakwater that is submerged. The structure would extend 7,000 feet east shadowing the original breakwater possibly using stone from the old structure. This alternative offers the most usable harbor area of the three alternatives considered.

3.3.2 15-Degree Alternative: At an angle 15° clockwise from the original breakwater the second design alternative would extend the structure approximately 4,800 feet to the south shore just west of the entrance to the east bay. The usable harbor area provided by this alternative is less than that of the Original Alignment Alternative but more than the 55-Degree Alternative.

3.3.3 55-Degree Alternative: The third orientation for the breakwater is at an angle of 55° clockwise from the original breakwater. This alignment results in a 2,500-foot breakwater extending to the south shore just east of a large drop in elevation in the bay from approximately 7 to 53 feet. This alternative offers the least usable harbor area of the three alternatives considered.

3.4 Structure Geometry: The geometry of the rubblemound structure varied slightly between the two proposed project sites due to the difference in wave heights.

3.4.1 Original Alignment: Based on a 20-year design wave height of 13.8 feet and a top of structure elevation of +7.0 above low water datum (LWD), the armor stone for the rubblemound placed along the original breakwater alignment would range in size from 6 to 12 tons with a majority of the stone being larger than 8 tons. The minimum layer thickness calculated for the armor stone is 9 feet and the crest would be 14 feet wide. The underlayer stone at this site would range between 1,100 and 2,100 pounds and would need to be a minimum of 4 feet thick. The core stone, or bedding stone, would consist of a 2-foot layer of stone ranging in size from 4 pounds to 100 pounds. A typical cross section of the rubblemound placed along the original breakwater alignment can be found on Plate 5.

3.4.2 15-Degree Alignment: Based on a 20-year design wave height of 10.7 feet and a top of structure elevation of +7.0 LWD, the armor stone for the rubblemound placed along the 15-degree breakwater alignment would range in size from 3 to 6 tons with a majority of the stone being larger than 7,500 pounds. The minimum layer thickness calculated for the armor stone is 7 feet and the crest would be 11 feet wide. The underlayer stone at this site would range between 500 and 1,000 pounds and would need to be a minimum of 3 feet thick. The core stone, or bedding stone, would consist of a 2-foot layer of stone ranging in size from 2 pounds to 50 pounds. A typical cross

section of the rubblemound placed along the 15-degree breakwater alignment can be found on Plate 6.

3.4.3 55-Degree Alignment: Based on a 20-year design wave height of 8.7 feet and a top of structure elevation of +7.0 LWD, the armor stone for the rubblemound placed along the 55-degree breakwater alignment would range in size from 3,000 to 6,000 ponds with a majority of the stone being larger than 4,000 pounds. The minimum layer thickness calculated for the armor stone is 6 feet and the crest would be 9 feet wide. The underlayer stone at this site would range between 250 and 600 pounds and would need to be a minimum of 2.5 feet thick. The core stone, or bedding stone, would consist of a 2-foot layer of stone ranging in size from 1 pound to 20 pounds. A typical cross section of the rubblemound placed along the 55-degree breakwater alignment can be found on Plate 7.

4. Construction Considerations A May 2002 site visit found no land access for construction of any of the alternatives. Therefore, it was assumed that construction would be marine based. This type of construction would require some dredging of the harbor to accommodate the draft required by the construction vessels. It was assumed that a 50-foot would channel dredged to an elevation of –10.0 would be required.

Other relevant assumptions include no necessary dredging of the harbor and no removal of the existing pile dike structure.

5. Cost Estimate A working cost estimate was developed for each of the alternatives previously discussed. Quantities used for preparation of the estimates were based on the preliminary design presented in this report and a cost summary can be found in Appendix B. Costs for the different alternatives are as follows:

Alternative	Cost
Original Alignment	$15,840,000
15-degree Alignment	$ 8,883,000
55-degree Alignment	$ 3,670,000

6. Conclusions While the 55-degree alternative has the lowest construction costs of the three alternatives, it provides for a smaller harbor than the original alignment or the 15-degree alignment. Therefore, the needs of the harbor would need to be better defined before a recommendation could be made as to which alternative best suits the harbor.

Reconnaissance Report
For
Harbor of Refuge
Grand Marais, Michigan

References

1. University of Michigan, Ocean Engineering Laboratory; Grand Marais Harbor Rehabilitation Design Alternatives; December 2000.

2. U.S. Army Corps of Engineers; Grand Marais Harbor, Michigan Reconnaissance Report on Reducing Future Maintenance; November 1978.

3. U.S. Army Corps of Engineers; Coastal Engineering Research Center; Shore Protection Manual; Second Printing 1984.

4. U.S. Army Corps of Engineers; Design of Breakwaters and Jetties, EM 1110-2-2904; 08 August 1986.

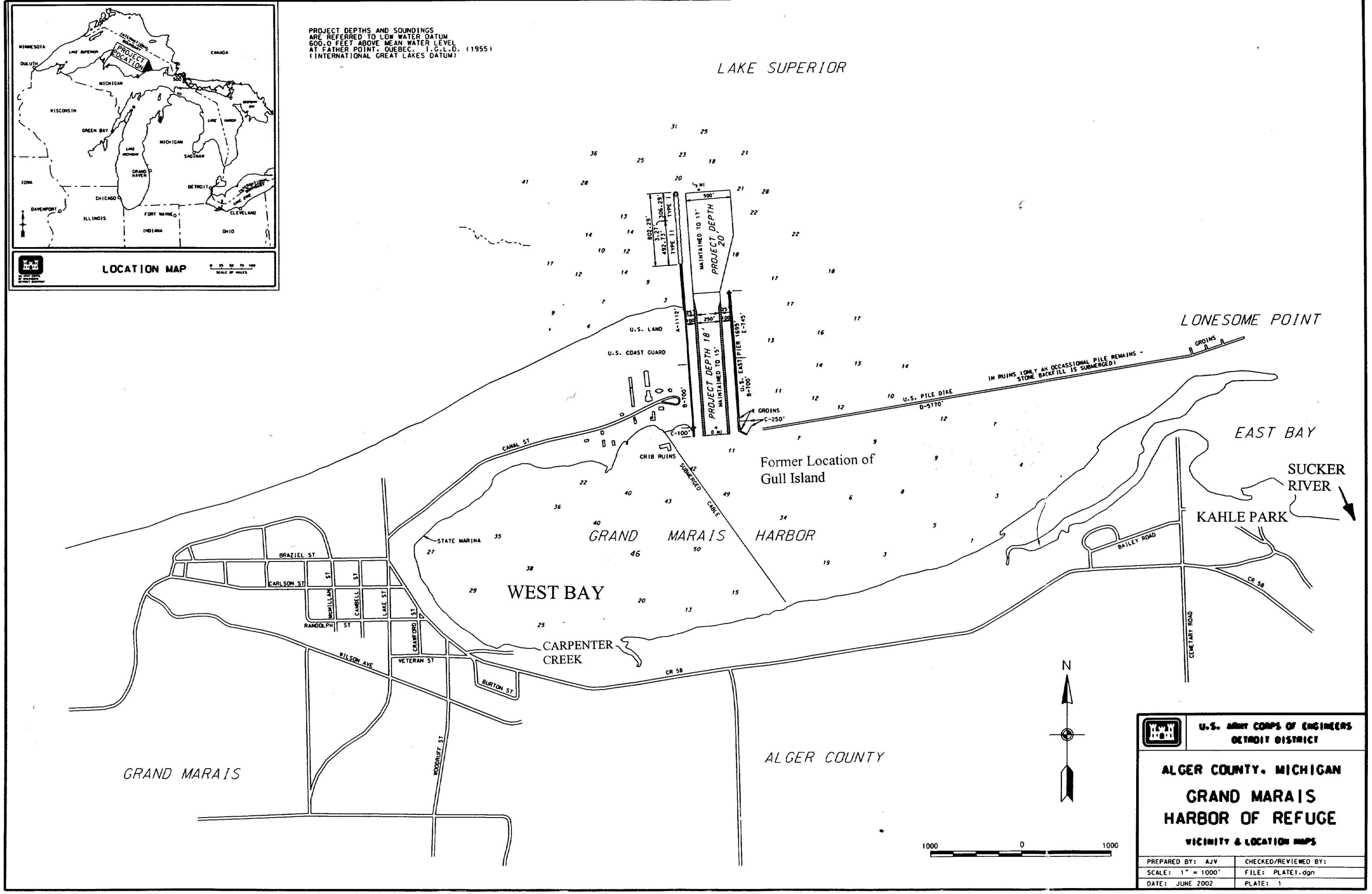
PROJECT DEPTHS AND SOUNDINGS
ARE REFERRED TO LOW WATER DATUM
600.0 FEET ABOVE MEAN WATER LEVEL
AT FATHER POINT, QUEBEC. I.G.L.D. (1955)
(INTERNATIONAL GREAT LAKES DATUM)
LOCATION MAP
MINNESOTA
DULUTH
LAKE SUPERIOR
CANADA
PROJECT LOCATION
MICHIGAN
WISCONSIN
GREEN BAY
LAKE MICHIGAN
SAGINAW
GRAND HAVEN
DETROIT
IOWA
CHICAGO
DAVENPORT
ILLINOIS
FORT WAYNE
INDIANA
CLEVELAND
OHIO
SCALE OF MILES
LAKE SUPERIOR
LONESOME POINT
U.S. LAND
U.S. COAST GUARD
PROJECT DEPTH 20'
MAINTAINED TO 17'
PROJECT DEPTH 18'
MAINTAINED TO 15'
U.S. EAST PIER 1695' E-745'
U.S. PILE DIKE
D-5170'
IN RUINS (ONLY AN OCCASSIONAL PILE REMAINS - STONE BACKFILL IS SUBMERGED)
GROINS
C-250'
B-700'
C-100'
CANAL ST
CRIB RUINS
SUBMERGED CABLE
Former Location of Gull Island
EAST BAY
SUCKER RIVER
KAHLE PARK
BAILEY ROAD
CR 58
CEMETERY ROAD
STATE MARINA
GRAND MARAIS HARBOR
WEST BAY
CARPENTER CREEK
BRAZIEL ST
CARLSON ST
MCMILLAN ST
CAMBELL ST
LAKE ST
RANDOLPH ST
CRAWFORD ST
WILSON AVE
VETERAN ST
BURTON ST
WOODRUFF ST
GRAND MARAIS
ALGER COUNTY
N
1000 0 1000
U.S. ARMY CORPS OF ENGINEERS
DETROIT DISTRICT
ALGER COUNTY, MICHIGAN
GRAND MARAIS
HARBOR OF REFUGE
VICINITY & LOCATION MAPS
PREPARED BY: AJV
CHECKED/REVIEWED BY:
SCALE: 1" = 1000'
FILE: PLATE1.dgn
DATE: JUNE 2002
PLATE: 1

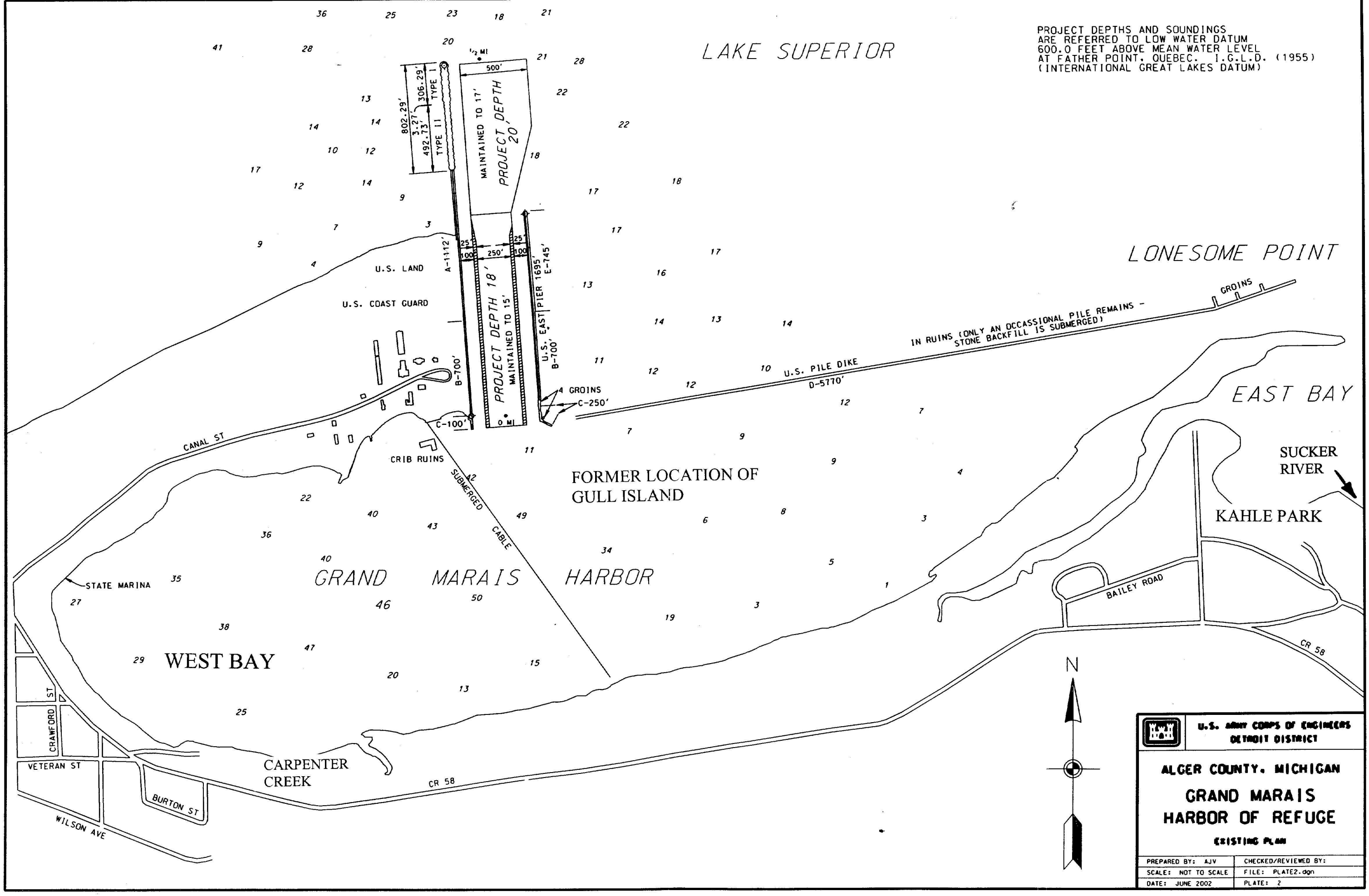
PROJECT DEPTHS AND SOUNDINGS
ARE REFERRED TO LOW WATER DATUM
600.0 FEET ABOVE MEAN WATER LEVEL
AT FATHER POINT, QUEBEC. I.G.L.D. (1955)
(INTERNATIONAL GREAT LAKES DATUM)
LAKE SUPERIOR
LONESOME POINT
EAST BAY
GRAND MARAIS HARBOR
WEST BAY
FORMER LOCATION OF
GULL ISLAND
SUCKER
RIVER
KAHLE PARK
CARPENTER
CREEK
U.S. LAND
U.S. COAST GUARD
CRIB RUINS
CANAL ST
STATE MARINA
CRAWFORD ST
VETERAN ST
WILSON AVE
BURTON ST
CR 58
BAILEY ROAD
SUBMERGED CABLE
U.S. PILE DIKE
D-5770'
IN RUINS (ONLY AN OCCASSIONAL PILE REMAINS - STONE BACKFILL IS SUBMERGED)
GROINS
4 GROINS
C-250'
C-100'
B-700'
A-1112'
U.S. EAST PIER 1695'
B-700'
E-745'
PROJECT DEPTH 18'
MAINTAINED TO 15'
PROJECT DEPTH 20'
MAINTAINED TO 17'
802.29'
306.29'
3.27'
492.73'
TYPE I
TYPE II
500'
250'
25'
100'
0 MI
1/2 MI
N
U.S. ARMY CORPS OF ENGINEERS
DETROIT DISTRICT
ALGER COUNTY, MICHIGAN
GRAND MARAIS
HARBOR OF REFUGE
EXISTING PLAN
PREPARED BY: AJV
CHECKED/REVIEWED BY:
SCALE: NOT TO SCALE
FILE: PLATE2.dgn
DATE: JUNE 2002
PLATE: 2

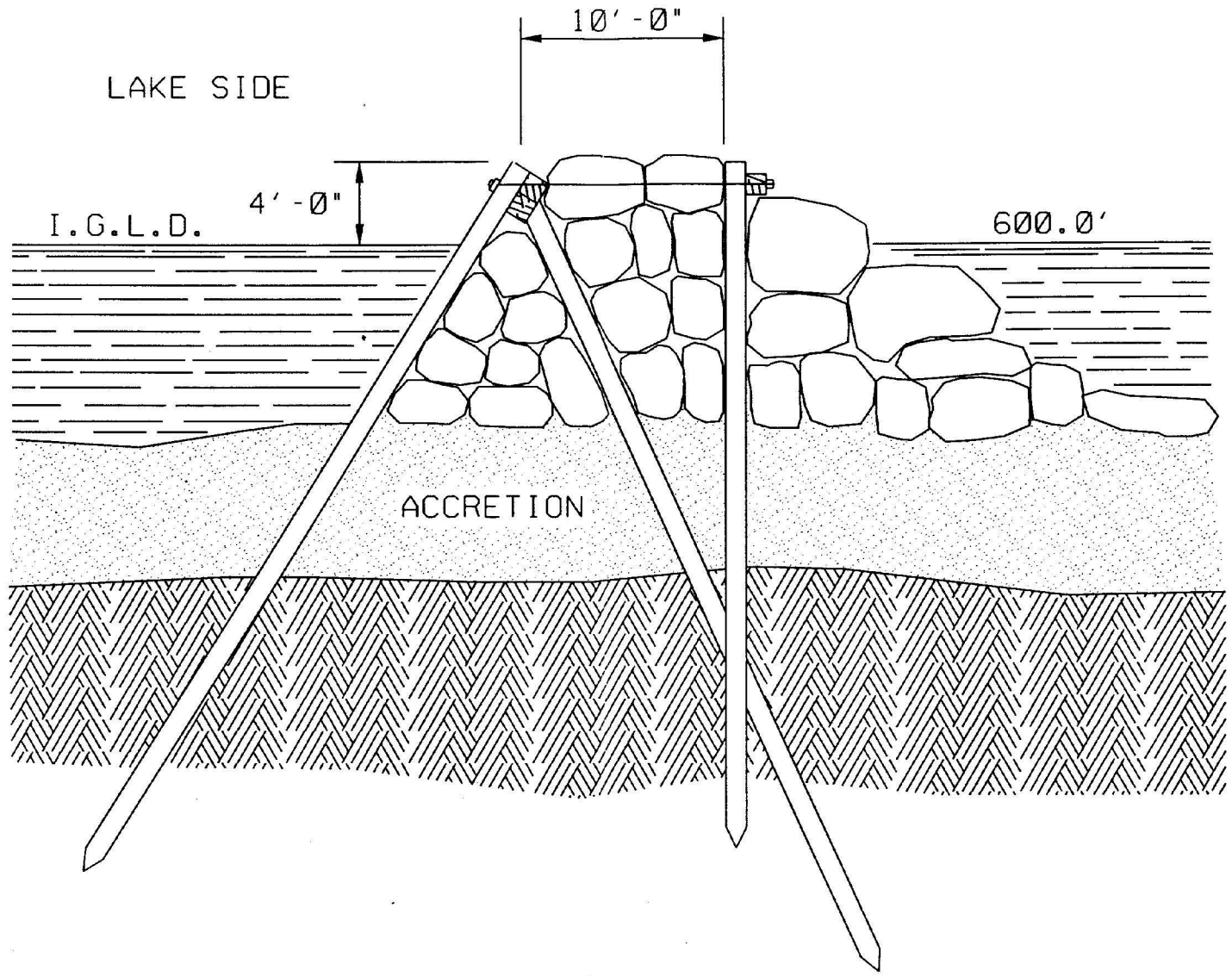

SCALE: 1" = 8'

8' 0 8'

PILE DIKE

BUILT: TIMBER STRUCTURE 1895-8
ROCK REINFORCEMENT 1905-07

U.S. ARMY CORPS OF ENGINEERS
DETROIT DISTRICT

ALGER COUNTY, MICHIGAN

GRAND MARAIS
HARBOR OF REFUGE

EXISTING CROSS SECTION

PREPARED BY: AJV	CHECKED/REVIEWED BY:
SCALE: 1" = 8'	FILE: PLATE3.dgn
DATE: JUNE 2002	PLATE: 3

PROJECT DEPTHS AND SOUNDINGS
ARE REFERRED TO LOW WATER DATUM
600.0 FEET ABOVE MEAN WATER LEVEL
AT FATHER POINT, QUEBEC. I.G.L.D. (1955)
(INTERNATIONAL GREAT LAKES DATUM)

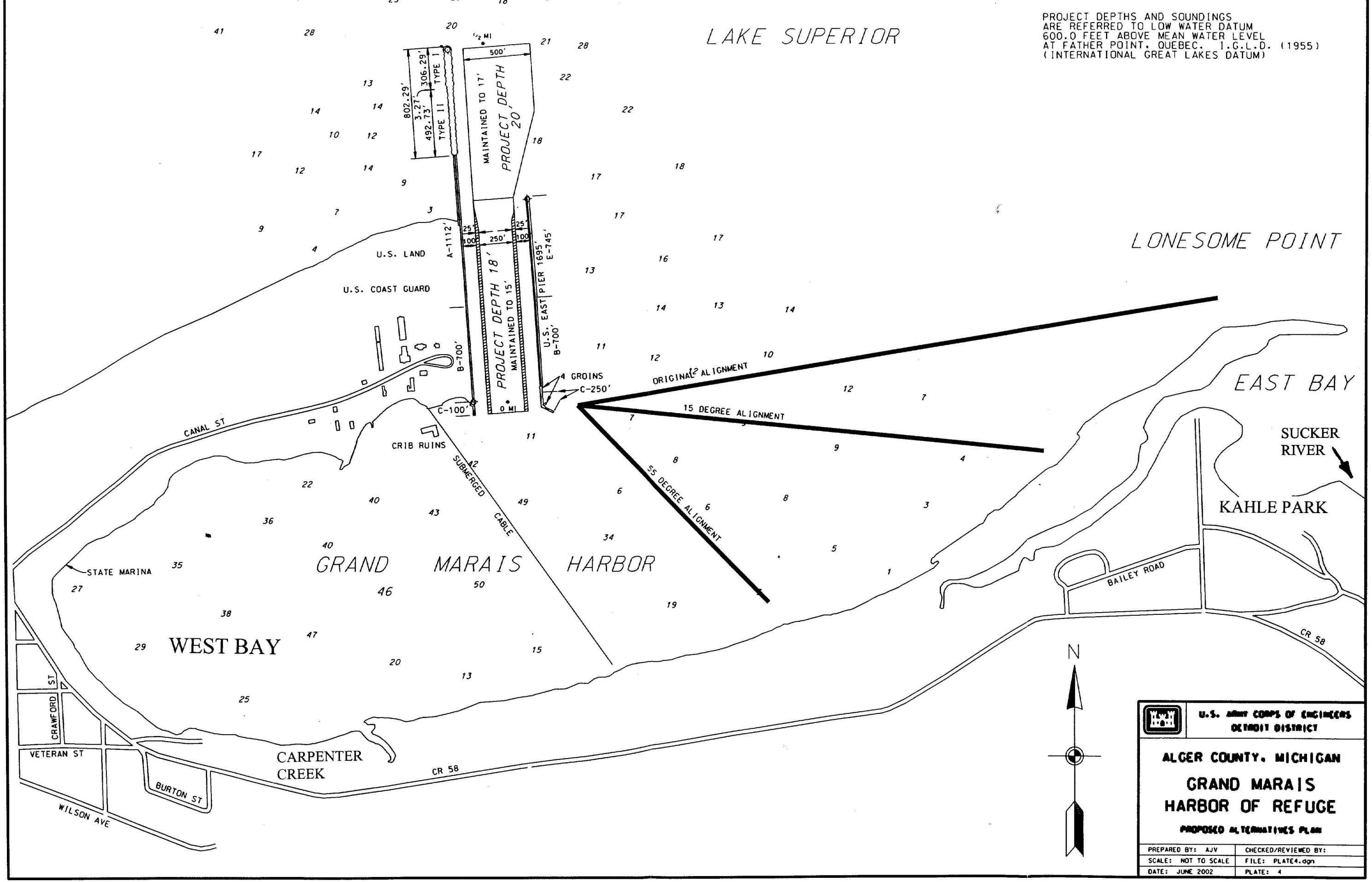

U.S. ARMY CORPS OF ENGINEERS
DETROIT DISTRICT

ALGER COUNTY, MICHIGAN

GRAND MARAIS
HARBOR OF REFUGE

PROPOSED ALTERNATIVES PLAN

PREPARED BY: AJV	CHECKED/REVIEWED BY:
SCALE: NOT TO SCALE	FILE: PLATE4.dgn
DATE: JUNE 2002	PLATE: 4

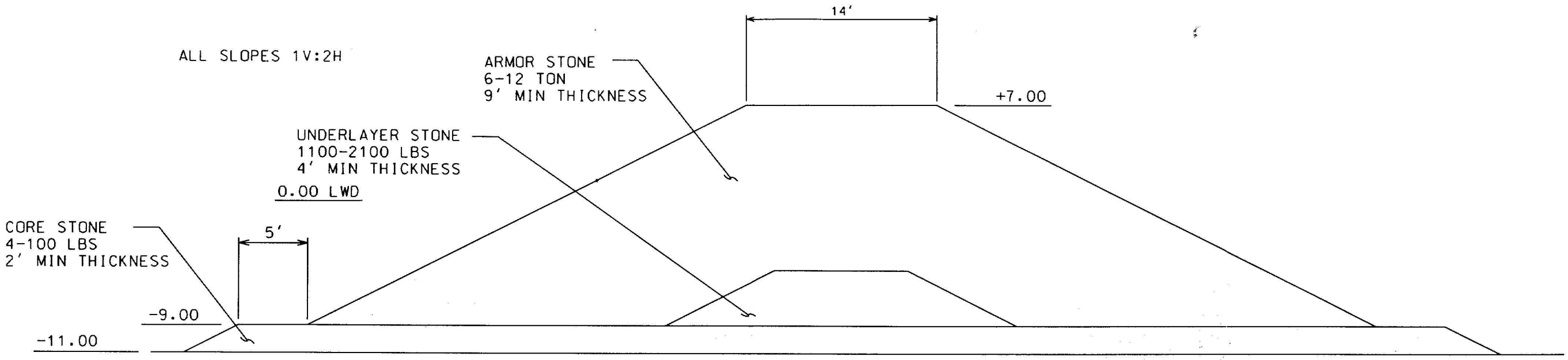

ORIGINAL ALIGNMENT CROSS SECTION

SCALE: 1/8" = 1'

U.S. ARMY CORPS OF ENGINEERS
DETROIT DISTRICT

ALGER COUNTY, MICHIGAN

GRAND MARAIS
HARBOR OF REFUGE

ORIGINAL ALIGNMENT CROSS SECTION

PREPARED BY: MP/HC	CHECKED/REVIEWED BY:
SCALE: AS SHOWN	FILE: PLATE5.DGN

DATE: JUNE 2002 PLATE: 5

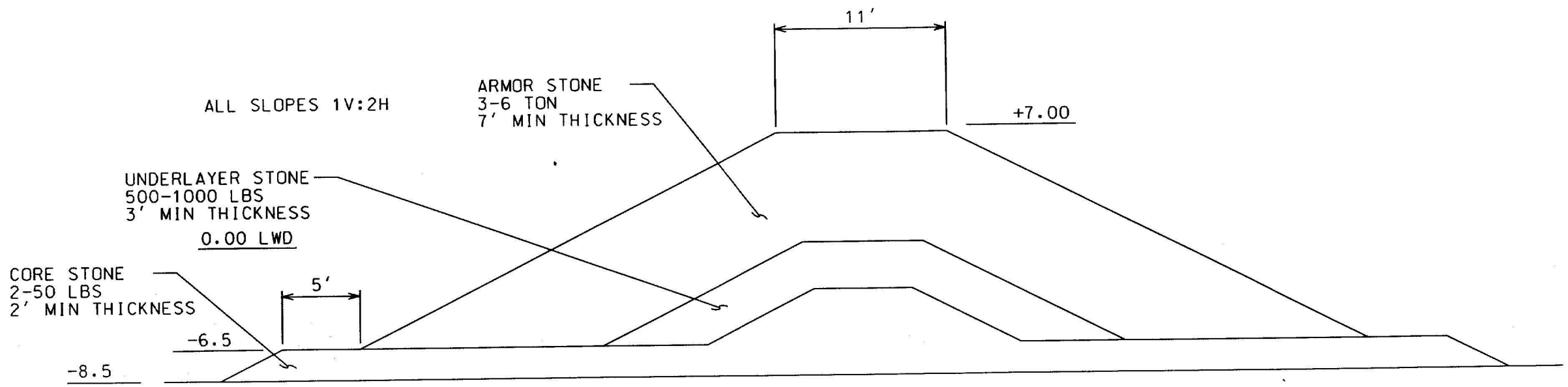

15-DEGREE ALIGNMENT CROSS SECTION

SCALE: 1/8" = 1'

U.S. ARMY CORPS OF ENGINEERS
DETROIT DISTRICT

ALGER COUNTY, MICHIGAN

GRAND MARAIS
HARBOR OF REFUGE

15-DEGREE ALIGNMENT CROSS SECTION

PREPARED BY: MP/HC	CHECKED/REVIEWED BY:
SCALE: AS SHOWN	FILE: PLATE6.DGN
DATE: JUNE 2002	PLATE: 6

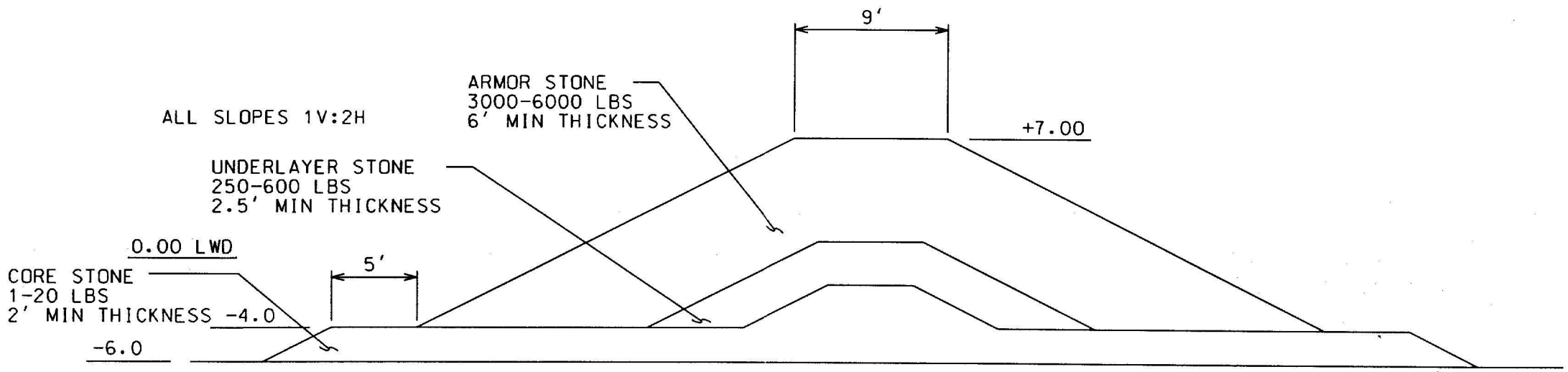

55-DEGREE ALIGNMENT CROSS SECTION

SCALE: 1/8" = 1'

U.S. ARMY CORPS OF ENGINEERS
DETROIT DISTRICT

ALGER COUNTY, MICHIGAN

GRAND MARAIS
HARBOR OF REFUGE

55-DEGREE ALIGNMENT CROSS SECTION

PREPARED BY: MP/HC	CHECKED/REVIEWED BY:
SCALE: AS SHOWN	FILE: PLATE7.DGN
DATE: JUNE 2002	PLATE: 7

WAVE ANALYSIS

GRAND MARAIS, MI

by

U.S. ARMY CORPS OF ENGINEERS
DETROIT DISTRICT

MAY 2002

Wave Analysis
Grand Marais, MI

Still-Water Elevation

The design water-surface elevations near Grand Marais, MI are summarized in Table 1. These elevations correspond to the still-water elevation plus storm surge for the given recurrence intervals and were determined in *Design Water Level Determination on the Great Lakes*, USACE, Detroit District, 1993. The elevations are based on a gage analysis of 122 years of data at Marquette, MI, and do not include the runup component. Lake Superior low water datum (LWD) is at 600.0 ft, IGLD 1955.

Table 1: Summary of still-water elevations near Grand Marais, MI

Recurrence Interval	Still-Water Elevation		
	IGLD 1955	IGLD 1985	Feet above LWD
10 year	603.0 ft	604.1 ft	+3.0
20 year	603.2 ft	604.3 ft	+3.2
30 year	603.4 ft	604.5 ft	+3.4
50 year	603.6 ft	604.7 ft	+3.6

Wave Analysis

A wave hindcast was performed and is described in *Design Wave Information for the Great Lakes: Lake Michigan*, U.S. Army Corps of Engineers, Waterways Experiment Station, 1978. This analysis of wind data from WIS station 49 yielded the 20-yr deep-water waves shown in Table 2.

Table 2: Summary of deep-water wave heights from WIS hindcast

Angle Class	Significant Wave Height, ft (H_s)	Peak Period, sec (T_p)
1	12.8 ft	8.5 ft
2	18.4 ft	9.9 ft
3	19.7 ft	10.8 ft

Given the configuration of the existing jetties and shoreline, waves from all three angle classes will impact the proposed configuration along the existing pile dike and the 15° offset breakwater. However, only waves from angle class 1 and 2 will impact the proposed structure with a 55° offset. To determine the angle class, a bearing is measured perpendicular to the harbor. The bearing at Grand Marais has been determined to be 180°. A perpendicular line is drawn through the origin of this bearing creating a half-plane in Cartesian space. The half-plane can be divided into three 60° arcs. Each arc represents an angle class starting with angle class 1 and increasing counter-clockwise.

The water depth in front of the proposed structures and the slope of the nearshore were estimated from NOAA Navigation Chart 14962. The water depths at the toe of the proposed structures are summarized in Table 3. These depths, which include storm surge and setup, are based on a historic survey, which may have significantly changed. The water depths in East Bay are dynamic as littoral material from the erosion of Lost Island and the east accretion fillet moves towards the shore and into West Bay.

Table 3: Summary of depths and wave parameters

Configuration of proposed breakwater	Water depth at toe of structure w/ 20-yr SWL	Deep-water wave	Shallow-water wave		Peak Period (T_p)
			H_s	H_{10}	
Existing Pile Dike	19.2 ft	19.7 ft	11.7 ft	13.8 ft	10.8 sec
15° Offset	14.2 ft	19.7 ft	9.0 ft	10.7 ft	10.8 sec
55° Offset	12.2 ft	18.4 ft	7.5 ft	8.7 ft	9.9 sec

The deepwater waves in Table 2 were transformed to shallow water waves using the TMA procedure and Goda's method. In all three instances, Goda's method produced a larger shallow-water wave and should be used in design calculations. The principal approach direction for all Goda calculations was assumed to be 0°.

Summary

The design wave information for the three proposed structures at Grand Marais is summarized below:

- Design wave:

  Existing Pile Dike
  H_s = 11.7 ft, non-breaking wave
  H_{10} = 13.8 ft, non-breaking wave (use for stone sizing)
  T_p = 10.8 sec

15° Offset

H_s = 9.0 ft, non-breaking wave

H_{10} = 10.7 ft, non-breaking wave (use for stone sizing)

T_p = 10.8 sec

55° Offset

H_s = 7.5 ft, non-breaking wave

H_{10} = 8.7 ft, non-breaking wave (use for stone sizing)

T_p = 9.9 sec

- Design still water elevation: (20-yr recurrence) 603.2 ft, IGLD 1955 (+3.2 ft above LWD)
  604.3 ft, IGLD 1985

RECONNAISANCE REPORT

for

HARBOR OF REFUGE

GRAND MARAIS, WISCONSIN

APPENDIX B

COST

Harbor/River:	Grand Marais Harbor
State:	Michigan
Project Name:	Rubblemound Structure
(Describe) :	Reconnaissance Report

PLANNING ESTIMATES

Date of Estimate: 30 May 2002

EPD: 30 September 2002

CWBS No.	Bid Item No.	Description of Features/Sub-Features	Alternative 1 (7,000 Lineal Feet Long) Quantity	UOM	U.P.	Estimate	Alternative 2 (4,800 Lineal Feet Long) Quantity	UOM	U.P.	Estimate	Alternative 3 (2,500 Lineal Feet Long) Quantity	UOM	U.P.	Estimate
		DREDGING												
	1	Site Work	1.00	L.S.	$300,000.00	$300,000.00	1.00	L.S.	$300,000.00	$300,000.00	1.00	L.S.	$300,000.00	$300,000.00
	2	Armor Stone												
		a) (6 - 12 Ton)	254,900.00	Ton	$40.75	$10,387,175.00								
		b) (3 - 6 Ton)					99,500.00	Ton	$40.75	$4,054,625.00				
		c) (1.5 - 3 Ton)									35,700.00	Ton	$40.75	$1,454,775.00
	3	Underlayer Stone												
		a) (1,100 - 2,100 Lbs.)	27,300.00	Ton	$32.00	$873,600.00								
		b) (500 - 1,000 Lbs.)					23,200.00	Ton	$32.00	$742,400.00				
		c) (250 - 600 Lbs)									7,700.00	Ton	$32.00	$246,400.00
	4	Core Stone												
		a) (4 - 100 Lbs.)	35,700.00	Ton	$26.50	$946,050.00								
		b) (2 - 50 Lbs.)					53,800.00	Ton	$26.50	$1,425,700.00				
		c) (1 20 Lbs)									21,800.00	Ton	$26.50	$577,700.00
	5	Dredging												
		a)												
		b)					36,000.00	C.Y.	$12.25	$441,000.00				
		c)									19,000.00	C.Y.	$12.25	$232,750.00
		Subtotal Contruction				$12,506,825.00				$6,963,725.00				$2,811,625.00
		Contigency 15.0%				$1,876,024.00				$1,044,559.00				$421,744.00
		Total Construction				$14,382,849.00				$8,008,284.00				$3,233,369.00
		Non-Construction												
		Miscellaneous Costs												
		As Builts				$10,000.00				$10,000.00				$10,000.00
		E & D During Construction				$143,800.00				$80,100.00				$32,300.00
		Subtotal Miscellaneaous Costs				$153,800.00				$90,100.00				$42,300.00
		Contigency 15.0%				$23,100.00				$13,500.00				$6,300.00
		Total Miscellaneous Costs				$176,900.00				$103,600.00				$48,600.00
		Planning & Design Analysis				$130,000.00				$130,000.00				$130,000.00
		Construction Management				$1,150,600.00				$640,700.00				$258,700.00
		Total Non-Construction				$1,457,500.00				$874,300.00				$437,300.00
		Total Project				$15,840,349.00				$8,882,584.00				$3,670,669.00

Recommended TAB II Program Amount

Prepared By: _____ Cost Engineer

Coordinated W/: _____ Technical Manager

Filename: (grandmarais)

6/10/2002

RECONNAISANCE REPORT

for

HARBOR OF REFUGE

GRAND MARAIS, WISCONSIN

APPENDIX C

DESIGN

✓BY: H CALAPPI

GRAND MARAIS

RUBBLEMOUND QTY

VOL OF STONE = (AREA OF CROSS SECTION) x (LENGTH)

CROSS SECTION AREAS FROM MICROSTATION

BREAKWATER LENGTHS FROM PLAN

EXISTING PILE DIKE (EPD)

TYPE	AREA		LENGTH	VOL	
ARMOR	664.99	FT^2	7000 FT	4654930	FT^3
UNDERLAYER	71.00	FT^2	↓	497000	FT^3
CORE	184.00	FT^2		1288000	FT^3

15°

TYPE	AREA		LENGTH	VOL	
ARMOR	378.48	FT^2	4800 FT	1816704	FT^3
UNDERLAYER	88.04	FT^2	↓	422592	FT^3
CORE	204.48	FT^2		981504	FT^3

55°

TYPE	AREA		LENGTH	VOL	
ARMOR	260.16	FT^2	2500 FT	650400	FT^3
UNDERLAYER	55.87	FT^2	↓	139675	FT^3
CORE	158.97	FT^2		397425	FT^3

UNIT WEIGHT STONE : 168.48 lbs/FT^3

GRAND MARAIS – RUBBLEMOUND QTY

EPD

ARMOR

4654930 $FT^3 \cdot .65 \cdot 168.48\ LBS/FT^3 = 509770694$ LBS

$= 254885$ TONS

UNDERLAYER

497000 $ft^3 \cdot .65 \cdot 168.48\ lbs/ft^3 = 54427464$ lbs

$= 27214$ tons

CORE

1288000 $ft^3 \cdot .65 \cdot 168.48\ lbs/ft^3 = 141051456$ lbs

$= 70526$ tons

15^0

ARMOR

1816704 $ft^3 \cdot .65 \cdot 168.48\ lbs/ft^3 = 198950888$ lbs

$= 99475$ tons

UNDERLAYER

422592 $ft^3 \cdot .65 \cdot 168.48\ lbs/ft^3 = 46278895$ lbs

$= 23139$ tons

CORE

981504 $ft^3 \cdot .65 \cdot 168.48\ lbs/ft^3 = 107486466$ lbs

$= 53743$ tons

GRAND MARAIS

RUBBLEMOUND QTY

55°

ARMOR

650400 $ft^3 \cdot .65 \cdot 168.48\ lbs/ft^3$ = 71226605 lbs

= 35613 tons

UNDERLAYER

139675 $ft^3 \cdot .65 \cdot 168.48\ lbs/ft^3$ = 15296089 lbs

= 7648 tons

CORE

397425 $ft^3 \cdot .65 \cdot 168.48\ lbs/ft^3$ = 43522807 lbs

= 21761 tons

GRAND MARAIS

ARMOR STONE

PRIMARY RUBBLEMOUND PROTECTION IS DESIGNED USING THE HUDSON FORMULA.

REF 1984 SHORE PROTECTION MANUAL PG 7-205, FORMULA 7-116

$$W = \frac{W_r H^3}{K_D (S_r - 1)^3 \cot \theta}$$

W = WEIGHT INDIVIDUAL ARMOR UNIT IN THE PRIMARY LAYERS, lbs

W_r = UNIT WEIGHT OF ARMOR STONE, lbs/ft^3

H = DESIGN WAVE HEIGHT, ft

K_D = STABILITY COEFFICIENT (TB 7-8, SPM)

S_r = SPECIFIC GRAVITY OF ARMOR STONE, W_r/W_w

$S_r = 2.7$ W_w = UNIT WT H_2O

θ = ∡ OF STRUCTURE SLOPE FROM HORIZONTAL

$G_s = 2.7$ PER RLE

GRAND MARAIS

$W_r = G_s \times 62.4 \ lbs/ft^3$

$= 2.7 \times 62.4 \ lbs/ft^3$

$W_r = 168.48 \ lbs/ft^3$

RUBBLE SLOPE BOTH SIDES

1V : 2H

$\theta = \tan^{-1}(1/2) = 26.57^\circ \quad \cot\theta = 2$

$K_D = 2.8$ FROM TABLE 7-8 1977 SPM
STRUCTURE HEAD

REFERENCE: GRAND MARAIS WAVE ANALYSIS
21 MAY 02
SPS

EXISTING PILE DIKE (EPD) $H_{10} = 13.8$ ft

$150^\circ \quad H_{10} = 10.7$ ft

$55^\circ \quad H_{10} = 8.7$ ft

EPD $W = \dfrac{168.48 \ lbs/ft^3 \cdot (13.8 \ ft)^3}{2.8(2.7-1)^3 \cdot 2}$

$= 16094 \ lbs$

$= 8.04$ ~~ns~~ ≈ 8 tons

GRAND MARAIS

15°
$$W = \frac{168.48\ lb/ft^3 \cdot (10.7\ ft)^3}{2.8\ (2.7-1)^3 \cdot 2}$$

$$= 7502\ lb$$

$$= 3.75\ tons \approx 4\ tons$$

55°
$$W = \frac{168.48\ lb/ft^3 \cdot (8.7\ ft)^3}{2.8\ (2.7-1)^3 \cdot 2}$$

$$= 4032\ lbs$$

$$= 2.01\ tons \approx 2\ ton$$

UNDERLAYER STONE / CORE LAYER STONE

FIG 7-117 SPM

UNDER LAYER STONE

EPD $\frac{W}{10} = \frac{16094\ lbs}{10} = 1609\ lbs$

15° $\frac{W}{10} = \frac{7502\ lbs}{10} = 750\ lbs$

55° $\frac{W}{10} = \frac{4032\ lbs}{10} = 403\ lbs$

CORE LAYER STONE

EPD $\frac{W}{200} = \frac{16094\ lbs}{200} = 80.5\ lbs$

15° $\frac{W}{200} = \frac{7502\ lbs}{200} = 37.5\ lbs$

55° $\frac{W}{200} = \frac{4032\ lbs}{200} = 20.2\ lbs$

GRAND MARAIS

CORE LAYER STONE

EPD $\frac{W}{4000} = \frac{16094 \text{ lbs}}{4000} = 4.02 \text{ lbs}$

15° $\frac{W}{4000} = \frac{7502 \text{ lbs}}{4000} = 1.9 \text{ lbs}$

55° $\frac{W}{4000} = \frac{4032 \text{ lbs}}{4000} = 1 \text{ lbs}$

LAYER GRADATION

ARMOR STONE

EPD $1.5\,W = 1.5(16094 \text{ lbs}) = 24141 \text{ lbs}$

$.75\,W = .75(16094 \text{ lbs}) = 12071 \text{ lbs}$

USE 1.5 W PER RLE

∴ 6 – 12 ton STONE W/75% GREATER THAN 8 ton

15° $1.5\,W = 1.5(7502 \text{ lbs}) = 11253 \text{ lbs}$

$.75\,W = .75(7502 \text{ lbs}) = 5627 \text{ lbs}$

∴ 3 – 6 lbs STONE W/75% GREATER THAN 7500 lbs

55° $1.5\,W = 1.5(4032 \text{ lbs}) = 6048 \text{ lbs}$

$.75\,W = .75(4032 \text{ lbs}) = 3024 \text{ lbs}$

∴ 3000 – 6000 lbs STONE W/75% GREATER THAN 4000 lbs

GRAND MARAIS

UNDERLAYER STONE

EPD $1.3\,(W/10) = 1.3\,(1609\ lbs) = 2092\ lbs$

$.7\,(W/10) = .7\,(1609\ lbs) = 1126\ lbs$

∴ 1100 - 2100 lbs STONE w/ 75%

GREATER THAN 1600 lbs

15° $1.3\,(W/10) = 1.3\,(750\ lbs) = 975\ lbs$

$.7\,(W/10) = .7\,(750\ lbs) = 525\ lbs$

∴ 500 - 1000 lbs STONE w/ 75%

GREATER THAN 750 lbs

55° $1.3\,(W/10) = 1.3\,(403\ lbs) = 524\ lbs$

$.7\,(W/10) = .7\,(403\ lbs) = 282\ lbs$

∴ 250 - 600 lbs STONE w/ 75%

GREATER THAN 400 lbs

CORE STONE

EPD ∴ 4 - 100 lbs (UNIFORM GRADE)

15° ∴ 2 - 50 lbs

55° ∴ 1 - 20 lbs

GRAND MARAIS

LAYER THICKNESS

$$R = n k_\Delta \left(\frac{W}{W_r}\right)^{1/3} \quad \text{(EQ 7-121, SPM)}$$

R = LAYER THICKNESS, ft

k_Δ = LAYER COEFFICIENT (SPM - TABLE 7-13)

n = # STONE UNITS

ARMOR STONE: $n = 2$ $k_\Delta = 1.0$

EPD

$$r = 2 \cdot 1.0 \left(\frac{16094 \text{ lbs}}{168.48 \text{ lbs/ft}^3}\right)^{1/3}$$

$$= 9.1 \text{ ft} \approx 9 \text{ ft}$$

15°

$$r = 2 \cdot 1.0 \left(\frac{7502 \text{ lbs}}{168.48 \text{ lbs/ft}^3}\right)^{1/3}$$

$$= 7.1 \text{ ft} \approx 7 \text{ ft}$$

55°

$$r = 2 \cdot 1.0 \left(\frac{4032 \text{ lbs}}{168.48 \text{ lbs/ft}^3}\right)^{1/3}$$

$$= 5.76 \text{ ft} \approx 6 \text{ ft}$$

UNDERLAYER STONE: $n = 2$ $k_\Delta = 1.0$

EPD

$$r = 2 \cdot 1.0 \left(\frac{\text{lbs}}{168.48 \text{ lbs/ft}^3}\right)^{1/3}$$

$$= 4.2 \text{ ft} \approx 4 \text{ ft}$$

GRAND MARAIS

15°

$$r = 2 \cdot 1.0 \left(\frac{575.0 \text{ lbs}}{168.45 \text{ lbs/ft}^3} \right)^{1/3}$$

$$= 3.3 \text{ ft} \approx 3 \text{ ft}$$

55°

$$r = 2 \cdot 1.0 \left(\frac{403 \text{ lbs}}{168.45 \text{ lbs/ft}^3} \right)^{1/3}$$

$$= 2.7 \text{ ft} \approx 2.5 \text{ ft}$$

TOE PROTECTION

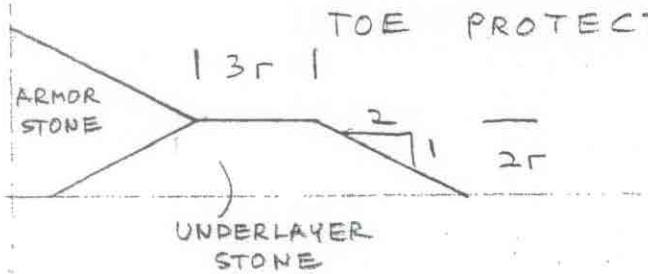

EPD $3r = 12$ ft

$2r = 8$ ft

15° $3r = 9$ ft

$2r = 6$ ft

55° $3r = 7.5$ ft

$2r = 5$ ft

GRAND MARAIS

CREST WIDTH

$$B = n K_\Delta \left(\frac{W}{W_r}\right)^{1/3} \quad \text{(EQ 7-120 SPM)}$$

EPD

$$B = 3 \cdot 1.0 \left(\frac{16094 \text{ lbs}}{168.48 \text{ lbs/ft}^3}\right)^{1/3}$$

$$= 13.7 \text{ ft} \approx 14 \text{ ft}$$

15°

$$B = 3 \cdot 1.0 \left(\frac{7502 \text{ lbs}}{168.48 \text{ lbs/ft}^3}\right)^{1/3}$$

$$= 10.6 \text{ ft} \approx 11 \text{ ft}$$

55°

$$B = 3 \cdot 1.0 \left(\frac{4032 \text{ lbs}}{168.48 \text{ lbs/ft}^3}\right)^{1/3}$$

$$= 8.6 \text{ ft} \approx 9 \text{ ft}$$

APPENDIX B

REAL ESTATE PLAN

REAL ESTATE PLAN
Grand Marais Harbor of Refuge, Michigan
Major Rehabilitation Project

AUTHORITY

Grand Marais, Michigan is a commercial harbor of refuge authorized by the River of Harbors Act of June 14, 1880. It consists of two well maintained parallel piers of 1,695' (East) and 2, 714' (West) for an aggregate length of 4,409'. In addition, there is a South breakwater 5,770' long which encloses the harbor. This breakwater has not been maintained since its construction in the 1890's and is currently in ruins. Section 104 of the Water Resources Development Act of 1996 (Public Law 104-303) authorizes a study of the South breakwater to determine the feasibility of its repair or replacement.

The Real Estate Plan (REP) describes the lands, easements, relocations and disposals required for the construction, operation and maintenance of the Project.

LOCATION

Grand Marais Harbor is located in Upper Peninsula of Michigan along the south shore of Lake Superior in Burt Township, Alger County, Michigan, 49 miles west of Whitefish Point and 40 miles east of Munising Harbor. The Harbor is the only harbor of refuge in the 89-mile stretch of the dangerously exposed Lake Superior coastline between Whitefish Point and Munising. The Village of Grand Marais and Burt Township have a total year around population is 488 with 350 residing in Grand Marais. The Village is the eastern entrance to the Picture Rocks National Lakeshore, which provides numerous year-round recreational activities.

PROJECT PURPOSE & DESCRIPTION

The purpose of the Project is to repair or replace the South breakwater to prevent continued deposit of sand in the eastern half of the West Bay area of the Harbor. Since the early 1960's, this area has received several million cubic yards of sand resulting in significant filling of the West Bay. The three proposed Project alternatives will decrease the deposit of sand by constructing a rubble mound breakwater. The alternatives recommend various breakwater locations.

PROJECT LANDS

The three alternatives will not require permanent use of any land. For all the alternatives the rubblemound breakwater is constructed in the navigation servitude. The breakwater will connect to the federal East pier but not to land. There, also, are approximately 1.3 acres of federal land under Corps of Engineers administrative jurisdiction adjacent to the West pier. This is sufficient to provide any necessary work/storage areas or land access. If excavation or dredging is required, it is anticipated this material will be placed along the shoreline of Lake Superior below the ordinary high water mark, i.e., in the navigation servitude. No present or anticipated mineral activity is within the Project area. Since the breakwater will be placed in the navigation servitude, the Project will not require displacement of persons or businesses. There are no historical properties within the proposed Project area. There are no cemeteries or public facilities within the Project area requiring relocation. In addition, plans and specifications do not identify any relocations of public utilities.

ESTATES

The minimum estates are temporary road and work area easements. There is, however, sufficient federal land under the administrative control of the Corps of Engineers to provide for these Project requirements. It is anticipated the non-federal sponsor will not need to provide land for the Project.

VALUE OF LANDS, RELOCATIONS, AND DISPOSAL AREAS

Since there is sufficient federal land for Project needs and the breakwater will be constructed in the navigation servitude, the non-federal sponsor will not need to provide any land for the Project. Thus, the sponsor will not be entitled to a credit against its required cash contribution for the value of lands, easements, rights-of-way, relocations, and disposal areas (LERRD's). Thus, LERRD's are not a project cost and their estimated value is not needed.

ENVIRONMENTAL

An Environmental Impact Statement (EIS) is not anticipated. As required by the National Environmental Policy Act of 1969 (NEPA), if the Project proceeds to the feasibility phase, the Corps of Engineers will assessed the environmental impacts of the Project through development of an Environmental Assessment (EA). As part of the preparation of the EA, formal coordination will be conducted with the State Historic Preservation Office (SHPO) to determine the potential impact of the Project on historic properties. Preliminary coordinate indicates the Project will not have any impact.

In addition, the Project will be evaluated under the following acts, as amended: Fish and Wildlife Act of 1956, Fish and Wildlife Coordination Act of 1958, National Historic Preservation Act (NHPA), Michigan Coastal Zone Management Act of 1972, Endangered Species Act of 1973, Water Resources Development Act of 1976, Clean Water Act of 1977, Clean Air Act, and Execute Orders 11988 and 11990. .

NON-FEDERAL SPONSOR IDENTIFICATION

Burt Township, Michigan has indicated a willingness to be the non-federal sponsor for the Project. The Township will provide local cooperation as required by the Project Cooperation Agreement (PCA) and participate in project design.

The Township has full power, authority and capability to perform the items of local cooperation. It, also, has the legal capability to provide its share of total project costs. Finally, the Township has the capability to complete its portion of the Project within the designated time frames.

The Township is capable of providing all required LERRD's necessary for the construction, operation and maintenance of the Project. The Township is a legally constituted public body with the full power, authority, and capability to perform of the terms of the PCA. It has the power of eminent domain. It is fully capable of handling acquisitions and condemnations. Requirements of PL 91-646, acquisition policies and procedures, LERRD crediting procedures, and the requirements for land acquisition will be discussed with the Township, if the Project proceeds to the feasibility phase. See enclosed Exhibit A, Assessment of Non-Federal Sponsor's Real Estate Acquisition Capability.

REAL ESTATE MANAGEMENT PLAN

Real Estate Division will continue to assess real estate requirements for the recommended alternative, as well as, provide detailed information regarding LERRD's identified as necessary for the Project. In addition, Real Estate Division will coordinate, monitor, and assist with all acquisition activities undertaken by the non-Federal Sponsor. This will assure that the acquisition process complies with Federal and State laws specifically the requirements under the Federal Uniform Relocation and Acquisition Act (P.L. 91-646). Real Estate Division will also attend district team meetings, review and provide input into draft & final reports prepared by the district team, and participate in ITR.

REAL ESTATE COST ESTIMATE

Real Estate Task	Federal Labor Cost	Non-Federal Admin. Cost	Contract/ MIPR	Travel/Per Diem	LERRD's Value	Total Cost
Assess RE requirements; Coordinate appraisal; Monitor acquisition activities; Attend team meetings, provide input for district reports; Provide ITR comments, etc.	$8,000.00					$8,000.00
Gross Appraisal			0	0		0
Non-Federal Administrative		0				0
Estimated LERRD's Value					0	0
Total Costs	$8,000.00	0	0	0	0	$8,000.00

REAL ESTATE DRAWING

AND

DEPARTMENT OF THE ARMY LEASES (OUTGRANTS)

DEPARTMENT OF THE ARMY LEASE NO. DACW35-1-94-3002

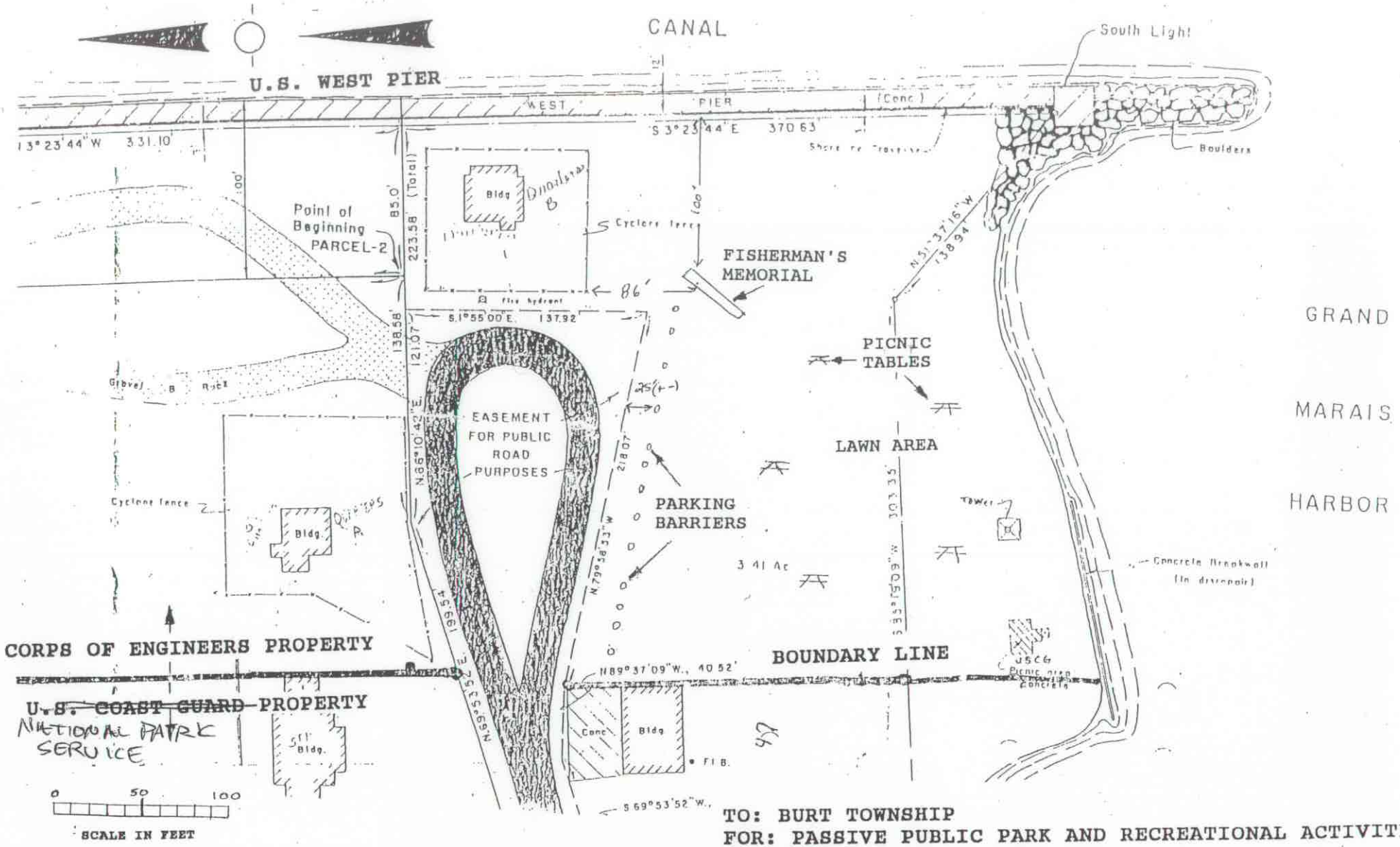

TO: BURT TOWNSHIP
FOR: PASSIVE PUBLIC PARK AND RECREATIONAL ACTIVITIES
AT: GRAND MARAIS HARBOR, MI

PLATE 9

EXHIBIT "A"

DATE: 5 FEB 1996

THE PUBLIC PARK AND RECREATIONAL ACTIVITIES ON THE PREMISES INCLUDE PICNIC TABLES, PARKING BARRIERS, FISHERMAN'S MEMORIAL, SCENIC VIEWING AREA AND LAWN CARE.

DEPARTMENT OF THE ARMY PERMIT NO. DACW35-4-97-3001
TO: NATIONAL PARK SERVICE
FOR: USE OF LAND FOR OPERATIONS & MAINTENANCE OF TWO DWELLINGS
AT: GRAND MARAIS HARBOR, MICHIGAN FEDERAL NAVIGATION PROJECT

NOTE:
THE TWO EXISTING DWELLINGS ON THE PREMISES ARE UNDER THE CARE AND CUSTODY OF THE NATIONAL PARK SERVICE. THE PERMIT AUTHORIZES USE OF 0.53 ACRE TO SUPPORT THE OPERATIONS AND MAINTENANCE OF THESE DWELLINGS.

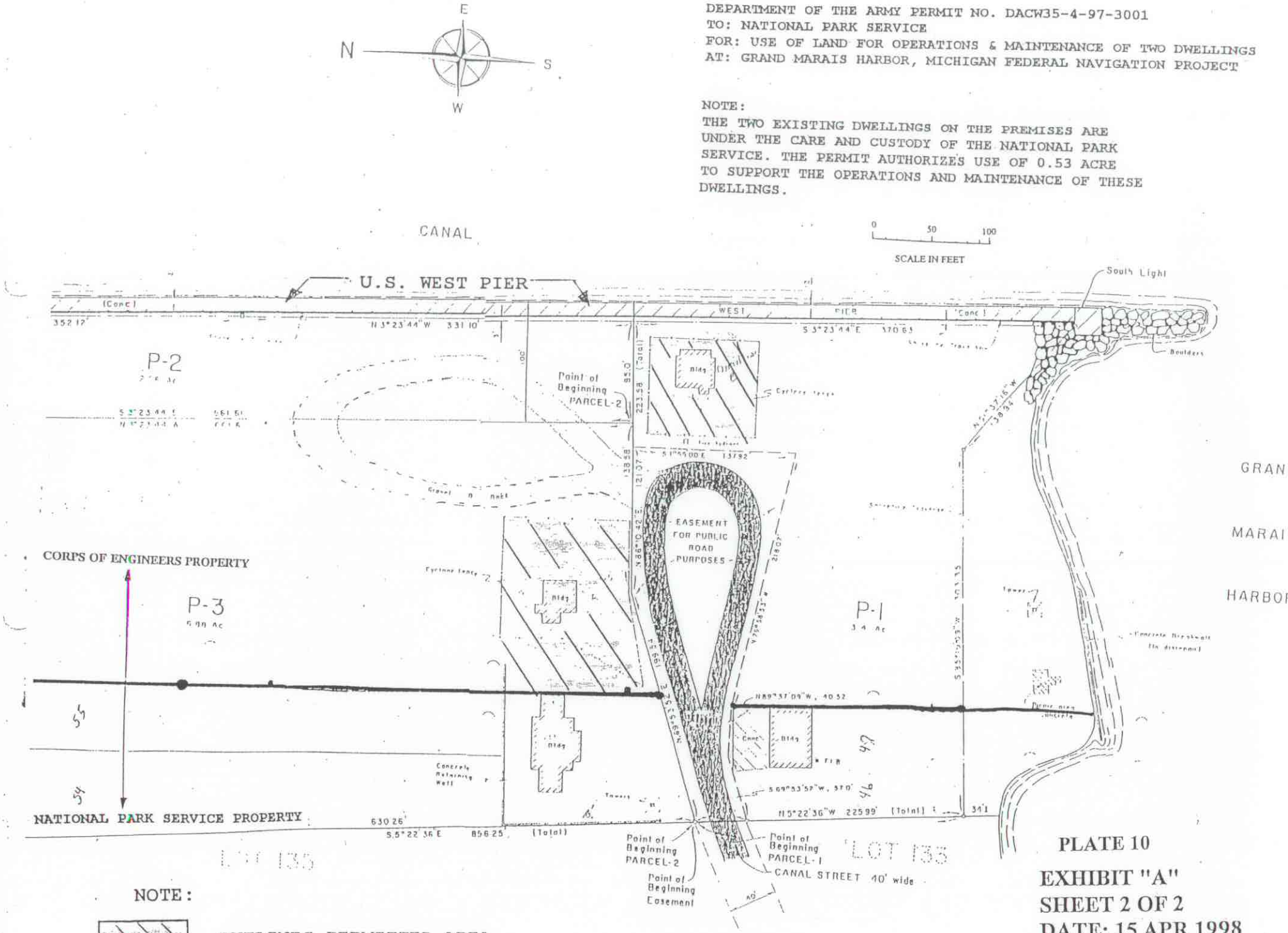

NOTE:

- OUTLINES PERMITTED AREA

PLATE 10

EXHIBIT "A"
SHEET 2 OF 2
DATE: 15 APR 1998

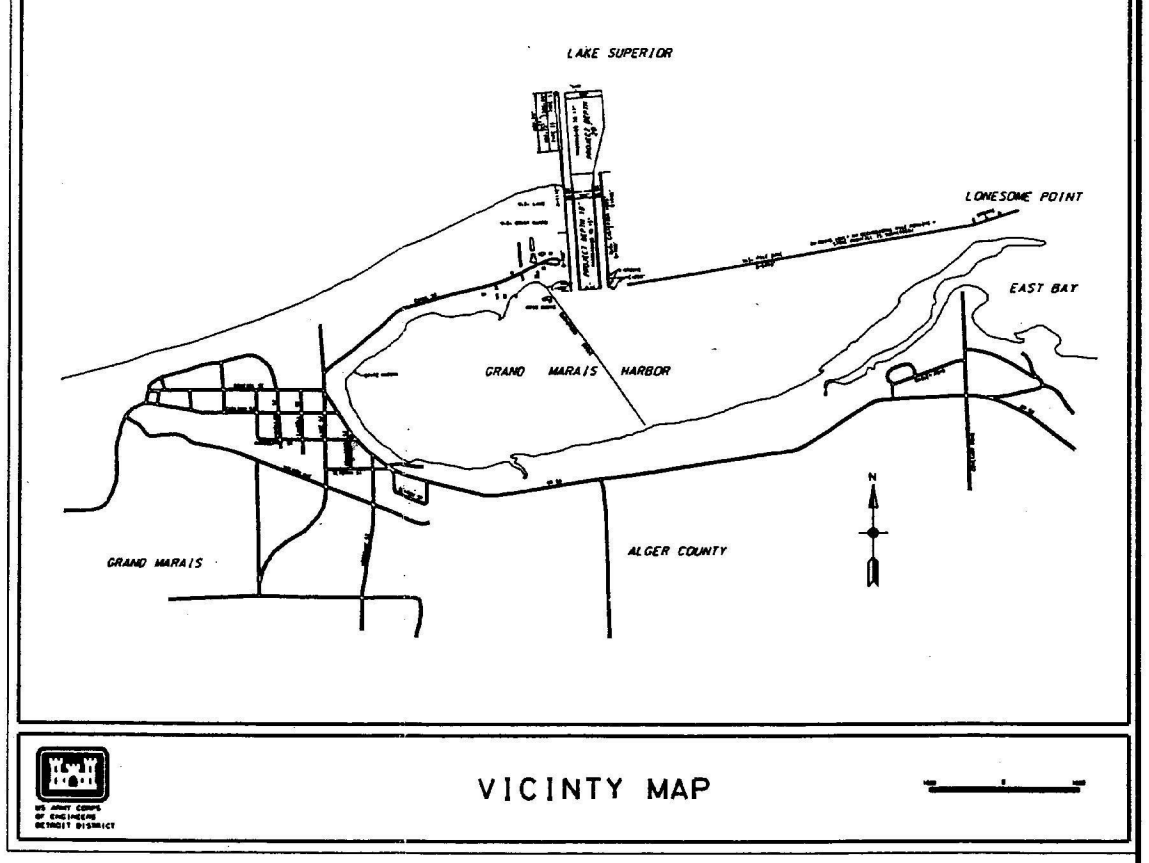

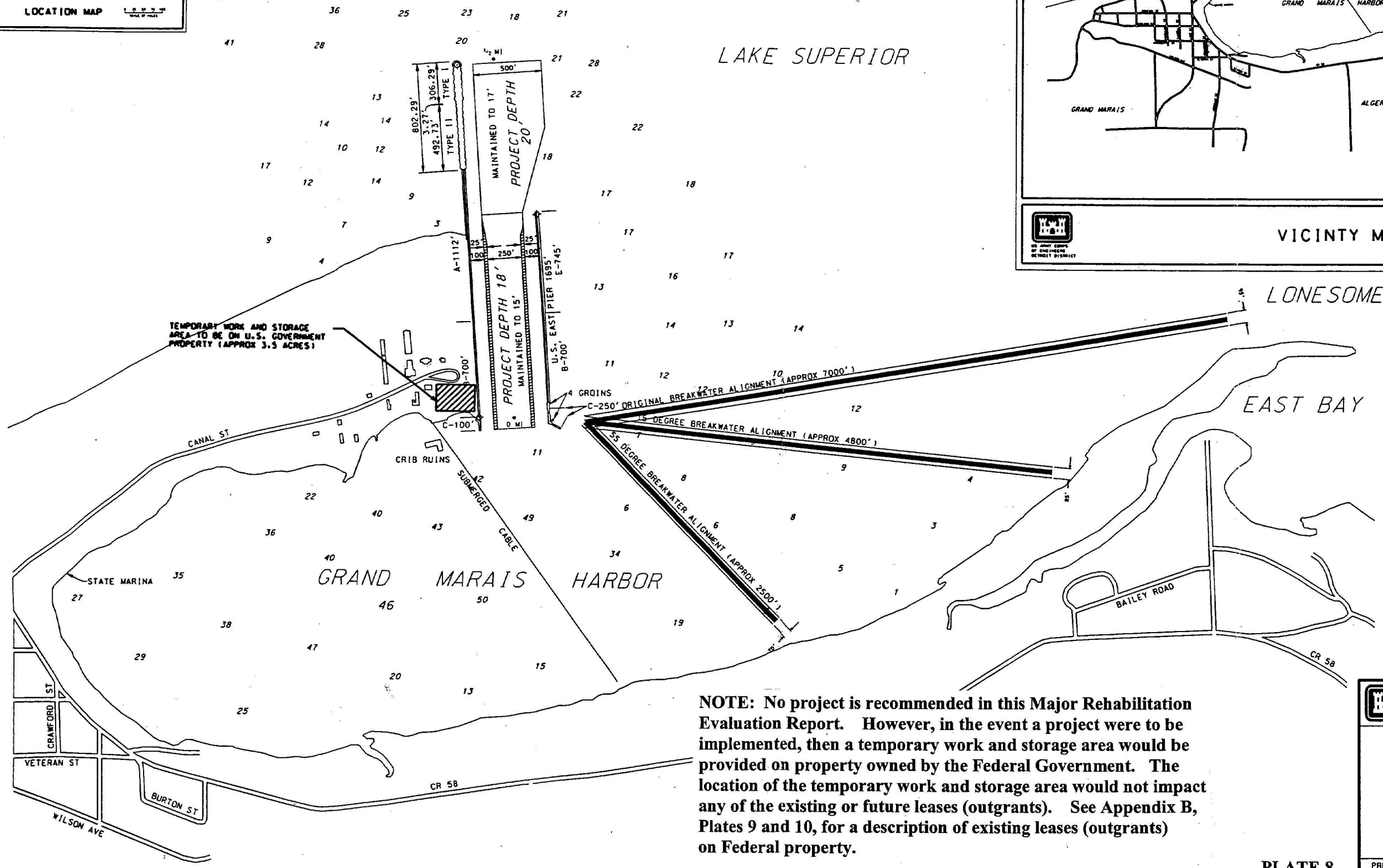

NOTE: No project is recommended in this Major Rehabilitation Evaluation Report. However, in the event a project were to be implemented, then a temporary work and storage area would be provided on property owned by the Federal Government. The location of the temporary work and storage area would not impact any of the existing or future leases (outgrants). See Appendix B, Plates 9 and 10, for a description of existing leases (outgrants) on Federal property.

PLATE 8

U.S. ARMY CORPS OF ENGINEERS
DETROIT DISTRICT

ALGER COUNTY, MICHIGAN

GRAND MARAIS HARBOR OF REFUGE

REAL ESTATE DRAWING

PREPARED BY: HC	CHECKED/REVIEWED BY:
SCALE: NOT TO SCALE	FILE: GMPERMEASEMENT
DATE: JUNE 2002	PLATE: EASEMENTS

EXHIBIT "A"

DETROIT DISTRICT REAL ESTATE ASSESSMENT OF NON-FEDERAL SPONSOR'S REAL ESTATE ACQUISITION CAPABILITY

PROJECT: Grand Marais Harbor, Grand Marais, Michigan Section 107

I. LEGAL AUTHORITY

a. Does the sponsor have legal authority to acquire and hold title to real property for project purposes?

(Yes/No)

Initials DCE Date 8/9/02

b. Does the sponsor have the power of eminent domain for this project?

(Yes/No)

Initials DCE Date 8/9/02

c. Does the sponsor have "quicktake" authority for this project?

(Yes/No)

Initials DCE Date 8/9/02

d. Are any of the lands/interests in land required for the project located outside the sponsor's political boundary?

(Yes/No)

Initials DCE Date 8/9/02

e. Are any of the lands/interests in land required for the project owned by an entity whose property the sponsor cannot condemn?

(Yes/No) *The required land is owned by the federal government.*

Initials DCE Date 8/9/02

II. HUMAN RESOURCE REQUIREMENTS

a. Will the sponsor's in-house staff require training to become familiar with the real estate requirements of Federal projects including P.L. 91-646, as amended?

(Yes/No)

Initials DCE__ Date 8/9/02___

b. If the answer to II.a. is "yes", has a reasonable plan been developed to provide such training? *No. This will be developed if the sponsor is required to provide land for the Project.*

Initials DCE__ Date 8/9/02___

c. Does the sponsor's in-house staff have sufficient real estate acquisition experience to meet its responsibilities for the project?

(Yes/No)

Initials DCE__ Date 8/9/02___

d. Is the sponsor's projected in-house staffing level sufficient considering its other workload, if any, and the project schedule?

(Yes/No)

Initials DCE__ Date 8/9/02___

e. Can the sponsor obtain contractor support, if required in a timely fashion?

(Yes/No)

Initials DCE__ Date 8/9/02___

f. Will the sponsor likely request USACE assistance in acquiring real estate?

(Yes/No)

Initials DCE__ Date 8/9/02___

III. OTHER PROJECT VARIABLES

a. Will the sponsor's staff be located within reasonable proximity to the project site?

(Yes/No)

Initials DCE Date 8/9/02

b. Has the sponsor approved the project/real estate schedule/milestones?

(Yes/No) *This will occur if the Project proceeds to the feasibility phase.*

Initials DCE Date 8/9/02

c. Has the sponsor performed satisfactorily on other USACE projects?

(yes/no/not applicable)

d. With regard to this project, the sponsor is anticipated to be: highly capable/ capable/moderately capable/marginally capable/insufficiently capable. (If the sponsor believed to be insufficiently capable, provide explanation.)

Initials DCE Date 8/9/02

Prepared by:

/S/ DON C. ERWIN
Signature

Chief, Acquisition Branch
Title

Reviewed and approved by:

/S/ VICTOR L. KOTWICKI
Signature

Chief, Real Estate Division
Title

APPENDIX C

CORRESPONDENCE LETTERS

United States Department of the Interior

FISH AND WILDLIFE SERVICE
East Lansing Field Office (ES)
2651 Coolidge Road, Suite 101
East Lansing, Michigan 48823-6316

IN REPLY REFER TO:

March 20, 2002

Paul Allerding
Environmental Assessment Manager
U.S. Army Corps of Engineers
P.O. Box 1027
Detroit, Michigan 48231

Dear Mr. Allerding:

We have received your March 13, 2002 request for preliminary review of breakwater alternatives for Grand Marais harbor in Alger County, Michigan. Your correspondence identifies four possible alternatives for construction. They are:

- Rehabilitate existing breakwater,
- Construct a new breakwater 15 degrees from the old,
- Construct a new breakwater at 55 degrees from old,
- No action.

All three construction alternatives would include a connection of the breakwater to the shoreline.

As you are aware, the Grand Marais area has historically supported nesting by the Great Lakes piping plover (*Charadrius melodus*), a federally listed endangered species. Grand Marais is also included in the recent designation of critical habitat for the piping plover throughout the Great Lakes Basin (66 Federal Register 88:22938, May 7,2001) and is generally considered an important breeding area in Michigan.

Piping plovers nested in Grand Marais as recently as last summer. Typically, plovers nest along the Lake Superior shore line west of the pier at the Coast Guard light station, as well as along the mouth of the Sucker River, near Lonesome point. Our limited review of historical aerial photographs of Grand Marais harbor suggests that substantial changes to the extent and configuration of sand beach and sand spit has occurred near the mouth of the Sucker River over the last 20 or more years. These changes appear to have resulted in a smaller area of potential nesting habitat.

Any project that would further diminish the extent of piping plover habitat in Grand Marais, and in particular, near the mouth of the Sucker River would be of concern. The extent to which each of the proposed construction alternatives would affect current shoreline forming processes, and therefore piping plover habitat, is unknown at this time. We expect a thorough analysis, including hydrologic modeling, would be required to fully understand the potential long-term effects of the proposed project.

We also would be concerned about any activity which would increase the level of human use of areas occupied by breeding piping plovers. Breakwaters which connect to land may provide additional access to the beach which could result in disturbance to nesting plovers and their young. It is possible, however, the proposal may also benefit the piping plover by stabilizing shoreline erosion and perhaps by creating new nesting habitat. We would be glad to discuss such possibilities with you.

If one of the proposed construction alternatives is selected, and you determine the project may affect the piping plover you must initiate consultation with our office under section 7 of the Endangered Species Act of 1973, as amended. If you determine that the proposed project may affect but would not likely adversely affect the plover or any other federally listed species, you must seek written concurrence from us. If you determine that issuance of a permit would adversely affect the piping plover or other listed species, you must initiate formal consultation with our office.

Thank you for the opportunity to comment on your proposal. If you have questions, please contact me at (517) 351-6320.

Sincerely,

Jack Dingledine
Fish and Wildlife Biologist

G:\ADMINISTRATION\ARCHIVES\2002\MAR02\Grandmaraisharbor03_02.jvd.wpd

.L LEVIN
MICHIGAN

.USSELL SENATE OFFICE BUILDING
WASHINGTON, DC 20510
(202) 224-6221

May 20, 2002

United States Senate

WASHINGTON, DC 20510

COMMITTEES:
ARMED SERVICES
GOVERNMENTAL AFFAIRS
SMALL BUSINESS

DE
29 MAY
THRU: DDE
THRU: Proj Mgmt Branch
TO: Wayne Schloop

Wayne Schloop
U.S. Army Corps of Engineers
Engineer District Detroit
P.O. Box 1027
Detroit, MI 48231-1027

O'Keefe
M. Geiger

Dear Mr. Schloop:

It has been some time since we have been in contact regarding Grand Marais' request that the U.S. Army Corps of Engineers construct a breakwater to restore their harbor for recreational and commercial use. At that time, you expressed the Corps' willingness to meet with the folks from Grand Marais to exchange ideas and information regarding their needs and potential uses of the harbor, as well as feasibility of construction. It is my understanding since then that you or Scott Parker had indicated to Legislative Assistant Kaye Meier that there may be funds in FY03 to initiate a design.

In response to my request for economic justification for repairs to the Harbor, Grand Marais Supervisor, Lee Durrwachter, has prepared a broad overview of how this area might stand to benefit from the completion of this project. What he envisions is a $60 million business investment in light of attracting and retaining commercial businesses with a harbor capable of handling cargo and cruise vessels, as it once could. I have enclosed his letter for your review. If additional or different information is needed to show sustainable benefits, please let me know as soon as possible.

Mr. Durrwachter indicated that October of this year would be the best time for the Corps to meet with him and the Grand Marais community. I would like to have seen this take place sooner; however, there are perhaps things we might do now to best facilitate action once this meeting does take place. Please describe what a study of this project by the U.S. Army Corps of Engineers would include and what specifically the Corps would need to move this thing off the ground.

I look forward to your response and ask that you indicate potential dates for an October meeting.

Sincerely,

Diana Charles

Diana Charles
U.P. Regional Representative
U.S. Senator Carl Levin

Cc: Lee Durrwachter; Wallace Parish

enclosure

STATE OFFICES

NA
IAL BLDG., RM. 102
ATER STREET
A, MI 49707
154-5520

DETROIT
477 MICHIGAN AVE.
ROOM 1860
DETROIT, MI 48226
(313) 226-6020

ESCANABA
823 LUDINGTON
SUITE 200B
ESCANABA, MI 49829
(906) 785-0052

GRAND RAPIDS
FEDERAL BUILDING
110 MICHIGAN AVE., N.W.
GRAND RAPIDS, MI 49503
(616) 456-2531

LANSING
1810 MICHIGAN NATIONAL TOWER
124 WEST ALLEGAN.
LANSING, MI 48933
(517) 377-1508

SAGINAW
COMMERCE CENTER
301 E. GENESEE
SAGINAW, MI 48607
(989) 754-2494

SOUTHGATE
15100 NORTHLINE RD.
SOUTHGATE, MI 48195
(734) 285-8596

TRAVERSE CITY
207 GRANDVIEW PARKWAY
SUITE 104, P.O. BOX 4449
TRAVERSE CITY, MI 49684
(231) 947-9569

WARREN
30500 VAN DYKE
SUITE 206
WARREN, MI 48093
(586) 573-9145

CONVERSATION RECORD

TIME: 11 AM

DATE: 30 MAY 02

TYPE: ☐ VISIT ☐ CONFERENCE ☑ TELEPHONE

☐ INCOMING ☑ OUTGOING

Location of Visit/Conference:

NAME OF PERSON(S) CONTACTED OR IN CONTACT WITH YOU	ORGANIZATION (Office, dept., bureau, etc.)	TELEPHONE NO.
Hal Harrington	Mich Dpt Env Qual	

SUBJECT: Grand Marais, Michigan

ROUTING	
NAME/SYMBOL	INT

SUMMARY: Hal had reviewed the breakwater alternatives + has no problem with any of them but said the shortest breakwater is prefered as it should be far less cost and they don't use east basin so why ~~[illegible]~~ include it in ~~[illegible]~~ harbor

ACTION REQUIRED

NAME OF PERSON DOCUMENTING CONVERSATION | SIGNATURE | DATE: 30 MAY 02

ACTION TAKEN

SIGNATURE | TITLE | DATE

STATE OF MICHIGAN
DEPARTMENT OF HISTORY, ARTS AND LIBRARIES
LANSING

JOHN ENGLER
GOVERNOR

DR. WILLIAM ANDERSON
DIRECTOR

July 16, 2002

KAREN KREPPS
DETROIT DISTRICT CORPS OF ENGINEERS
PO BOX 1027
DETROIT MI 48231-1027

RE: ER-02-109 Grand Marais Harbor Breakwater Rehabilitation, sec. 6 & 7, T49N, R13W, Grand Marais, Alger County (COE)

Dear Ms. Krepps:

Under the authority of Section 106 of the National Historic Preservation Act of 1966, as amended, we have reviewed the above-cited undertaking at the location noted above. Based on the information provided for our review, it is the opinion of the State Historic Preservation Officer (SHPO) that **no historic properties are affected** within the area of potential effects of this undertaking.

However, the State Archaeologist, Dr. John Halsey, notes that this is an area of high archaeological sensitivity, including the possibility of shipwreck remains near the former breakwater that have not yet been recorded. If the scope of work changes in any way, or if any such remains are discovered, please notify this office immediately.

The views of the public are essential to informed decision making in the Section 106 process. Federal Agency Officials or their delegated authorities must plan to involve the public in a manner that reflects the nature and complexity of the undertaking, its effects on historic properties and other provisions per 36 CFR § 800.2(d). We remind you that Federal Agency Officials or their delegated authorities are required to consult with the appropriate Indian tribe and/or Tribal Historic Preservation Officer (THPO) when the undertaking may occur on or affect any historic properties on tribal lands. **In all cases**, whether the project occurs on tribal lands or not, Federal Agency Officials or their delegated authorities are also required to make a reasonable and good faith effort to identify any Indian tribes or Native Hawaiian organizations that might attach religious and cultural significance to historic properties in the area of potential effects and invite them to be consulting parties per 36 CFR § 800.2(c-f).

This letter evidences the Corps of Engineer's compliance with 36 CFR § 800.4 "Identification of historic properties", and the fulfillment of the Corps of Engineer's responsibility to notify the SHPO, as a consulting party in the Section 106 process, under 36 CFR § 800.4(d)(1) "No historic properties affected".

The State Historic Preservation Office is not the office of record for this undertaking. You are therefore asked to maintain a copy of this letter with your environmental review record for this undertaking.

If you have any questions, please contact Martha MacFarlane Faes, Environmental Review Coordinator, at (517) 335-2721. **Please reference our project number in all communication with our office regarding this undertaking**. Thank you for this opportunity to review and comment, and for your cooperation.

Sincerely,

Martha MacFarlane Faes
Environmental Review Coordinator

for Brian D. Conway
State Historic Preservation Officer

MMF:JRH:ROC:bgg

STATE HISTORIC PRESERVATION OFFICE, MICHIGAN HISTORICAL CENTER
717 WEST ALLEGAN STREET • P.O. BOX 30740 • LANSING, MICHIGAN 48909-8240
(517) 373-1630
www.michigan.gov/hal