US Army Corps of Engineers ®
Detroit District

APPENDIX A

ENGINEERING APPENDIX

Detroit Beach Section 205
Frenchtown Township, Michigan

Detroit Beach
Frenchtown Township, Michigan
Engineering Appendix

TABLE OF CONTENTS

Section	Page
Section 1 - Civil Design	A-1
Alternative 1 – No Federal Action	A-4
Alternative 2 – Rehabilitate Existing Flood Protection	A-5
Alternative 3 – Cantilever Steel Sheet Pile Wall	A-5
Alternative 4 – Anchored Steel Sheet Pile Wall	A-6
Alternative 5 – Concrete Panel/H-Pile Wall	A-6
Alternative 6 – Steel Sheet Pile/H-Pile Wall	A-7
Alternative 7 – Concrete Gravity Wall	A-7
Alternative 8 – Gabion Wall	A-7
Alternative 9 – Armored Slope	A-8
Section 2 - Survey and Mapping	A-8
Section 3 - Construction Procedures and Water Control Plan	A-8
Section 4 - Operation and Maintenance	A-8
Section 5 - Access Roads	A-9
Section 6 - Project Security	A-9
Section 7 - Summary and Recommendations	A-10

APPENDICES

Appendix	Page
Appendix A-1 - Design Alternative Cross Sections	A-11
Appendix A-2 - Site Drawings	A-17
Appendix A-3 - Design Calculations and Quantities	A-30
Appendix A-4 - Site Photographs	A-95
Appendix A-5 - Advanced Measures O & M Manual	A-100

APPENDIX A
Engineering Appendix

Section 1 – Civil Design:

Frenchtown Township is located in the northeast portion of Monroe County, on Brest Bay along the eastern shore of Lake Erie (see Figures 1 and 2). In this Section 205 project, approximately 3400 LF of existing flood wall is to be repaired or replaced with a stable structure and approximately 3800 LF of shoreline is anticipated to require additional riprap stone protection. In addition, existing flanking levees will be cleared of trees and vegetation and repaired as needed to complete the line of flood protection. Furthermore, sections of the north and south flanks will be replaced with concrete and SSP wall sections, respectively, to minimize real estate costs.

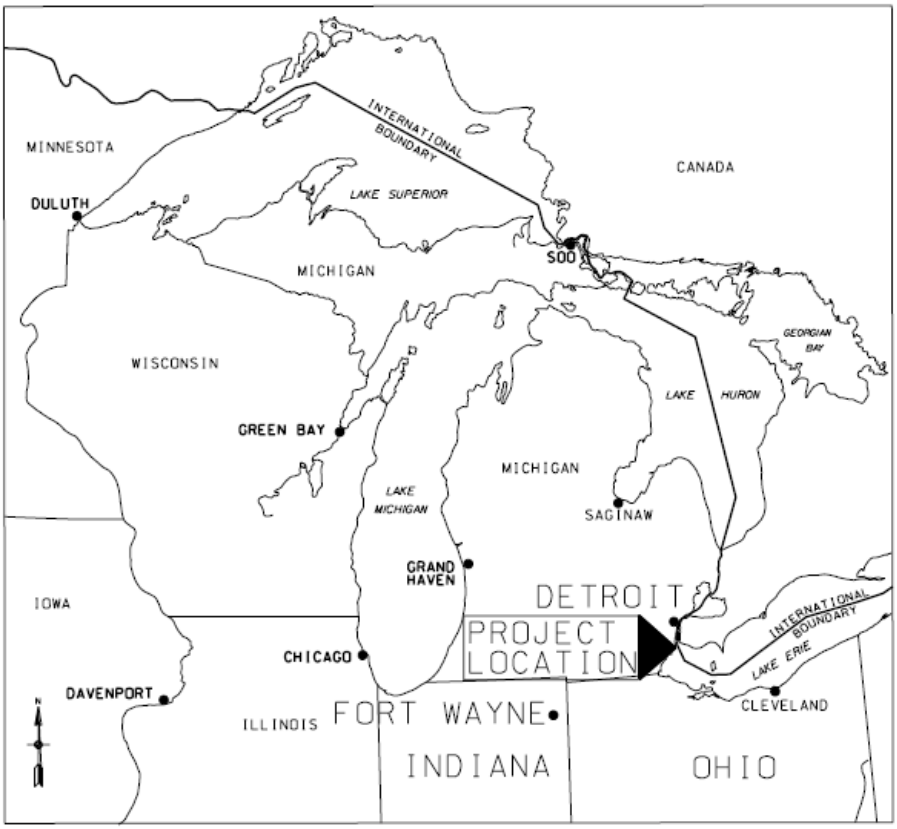

Figure 1. Project Location Map.

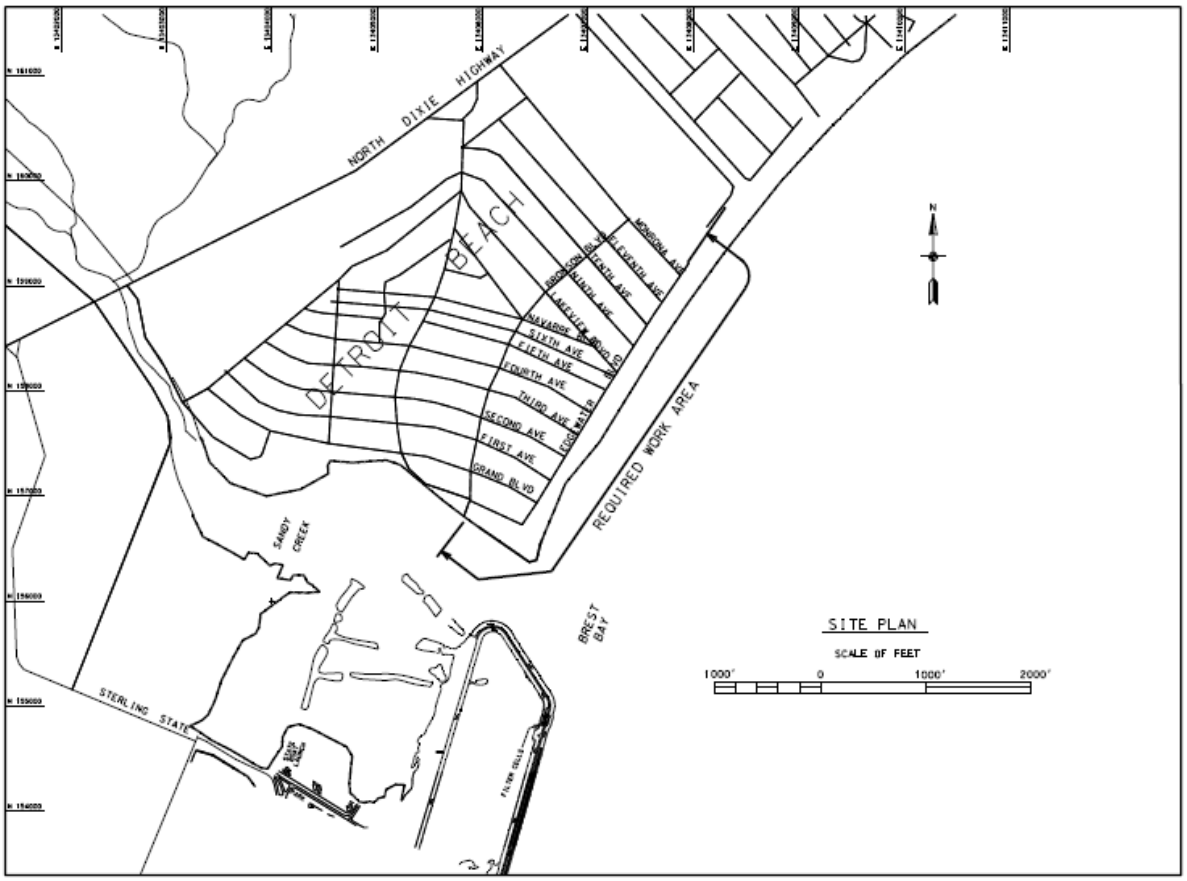

Figure 2. Project Vicinity Map.

Existing Flood Control Project: The existing flood control project consists of clay levees with and without riprap slope protection, steel sheet pile (SSP) walls, and two pump stations. Major repairs to the existing flood control project were last done in 1985-86 under the COE Advanced Measures Authority. The repairs consisted of replacement of approximately 50 linear feet of steel sheet pile wall along the south corner of the project and about 500 linear feet of steel sheet pile wall along the north corner of the project. Other repairs consisted of repair or raising of the existing clay levees and replacement or addition of rip rap stone. Refer to the site photographs in Appendix A-4.

Currently, the older sections of SSP wall (circa 1950s) are showing various signs of distress and are no longer straight; tiebacks are broken; flap gates are damaged or missing; riprap toe protection has been washed away and settling/washout behind the SSP requires additional backfill. The original SSP wall was not constructed with z-shape piling, but with flat sheets. The flat sheet SSP has no significant bending capacity to resist additional backfill behind the structure. This is the main reason the wall is currently "bulging" out and leaning. Therefore, the sections of SSP wall in poor condition will require major rehabilitation or replacement with a suitable and stable structure to maintain the existing flood control project.

The existing flanking levees will also be included in the project and will be repaired to 579 feet (IGLD 85) which is approximately equal to the existing elevation. Required repairs to the existing flanking levees includes clearing and grubbing of vegetation, removal of rootballs for all trees over 2" in diameter, placement of compacted clay fill and toe stone as needed, and establishment of grass cover.

No repair work is anticipated for the existing pump stations as these stations are currently maintained by Monroe County.

Relocations: Project site review at this stage has not identified any utilities requiring relocation as related to the proposed construction features in the Detroit Beach Section 205 Project. However, further evaluation will be performed in the Final Design Phase to be accomplished prior to preparation of Plans and Specifications.

Borrow & Disposal Areas: There are no on-site borrow areas, all required material will be obtained off-site. The disposal for all clean material excavated from the project area will be disposed of in accordance with State and local regulations. Acceptable clay material from removed levees may be re-used for levee repair. Engineered stone and fill material will be obtained from approved sources.

Alternatives: All of the evaluated alternatives for this flood control project are listed and described below. See Figure 3 for the typical existing cross section. Design alternative cross-sections are located in Appendix A-1. Site drawings are shown in Appendix A-2 and design calculations and quantities are provided in Appendix A-3.

The riprap stone gradation was selected as recommended by the 2007 H&H Study of Wave Overtopping (DPR Appendix D). Required riprap stone sizes will need to be re-evaluated if any revisions of this analysis are made. It is anticipated that riprap stone be replenished/added along the entire lakeside portion of the project. Flank areas and new flank wall sections will not require riprap protection because it is anticipated that wave action, if any, will be minimal.

The placement of new riprap stone along the shoreline will impact the existing beach areas so it should be determined during final design if the beach areas can be left as is or if stone is required along those areas. Previous design in 2001 called for constructing a stone jetty to protect the beach areas and eliminate the need for riprap stone along the wall on the beach areas. The MDEQ objected to this structure and the project ended.

The Alternatives which have been evaluated are:

- Alternative 1 - No Federal Action;
- Alternative 2 - Rehabilitate Existing Flood Protection;
- Alternative 3 - Rehabilitate and Replace Existing Flood Protection – Cantilever Steel Sheet Pile Wall;
- Alternative 4 - Rehabilitate and Replace Existing Flood Protection – Anchored Steel Sheet Pile Wall;

- Alternative 5 - Rehabilitate and Replace Existing Flood Protection – Concrete Panel/H-pile Wall;
- Alternative 6 - Rehabilitate and Replace Existing Flood Protection – SSP/H-pile Wall;
- Alternative 7 - Rehabilitate and Replace Existing Flood Protection – Concrete Gravity Wall;
- Alternative 8 - Rehabilitate and Replace Existing Flood Protection – Gabion Wall
- Alternative 9 - Rehabilitate and Replace Existing Flood Protection – Armored Slope (no wall)

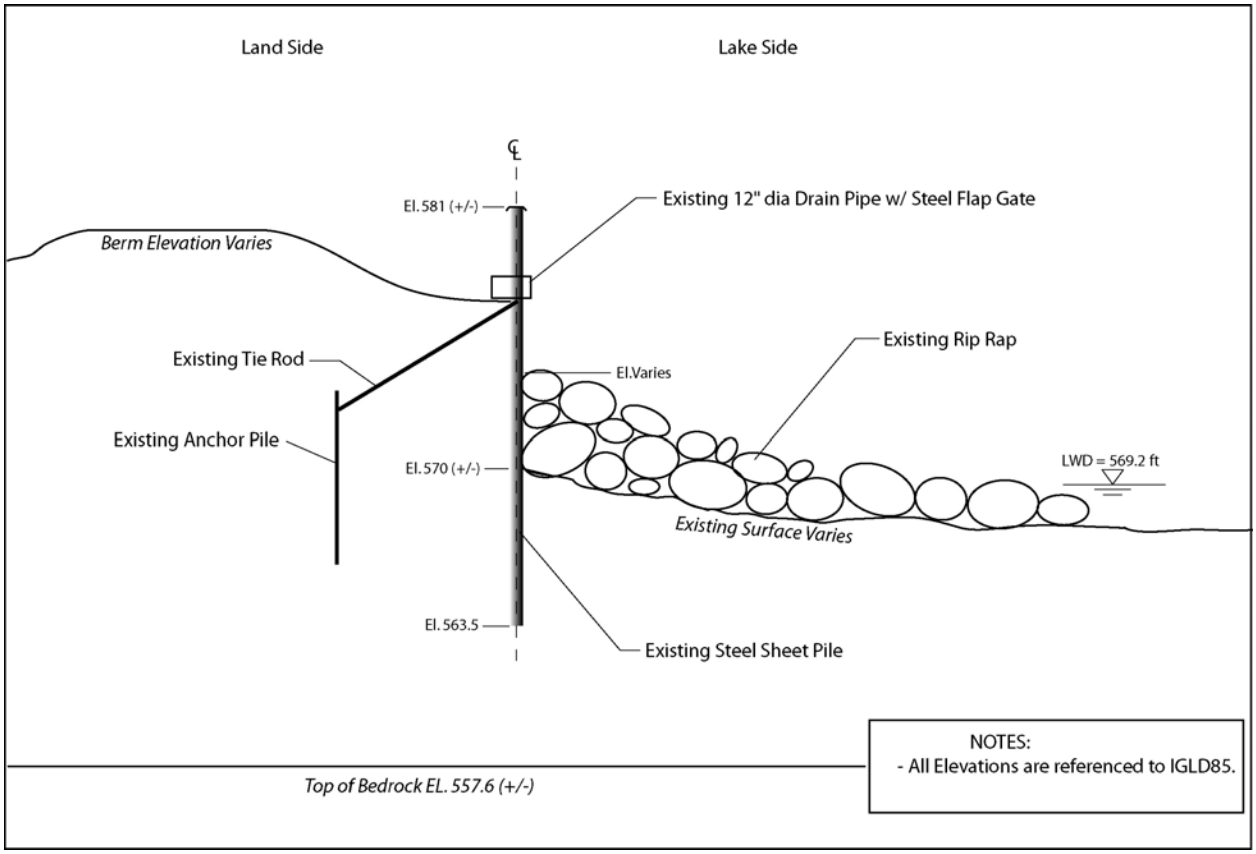

Figure 3. Typical Existing Wall Section (*Not to Scale*).

Alternative 1 – No Federal Action:

With this alternative, it is expected that the existing degradation trend of the temporary flood protection will continue on an accelerated basis. Ongoing loss of seawall backfill and toe-protection washout will increase the chances of seawall failure once high water levels return. Buckling and wavy seawall sections will tear and list, rendering it useless in a flood event; the integrity of the catch basin berms will remain questionable as nearby homeowners incorporate or modify the berms into their landscaping plans. Unmaintained vegetation along the flanking levees will continue to reduce their effectiveness in a flood event. The non-federal sponsor can perform reasonable repairs; however, the overall system will most likely continue to degrade within the next ten to fifteen years.

Alternative 2 – Rehabilitate Existing Flood Protection:

This alternative would involve an upgrade of the existing flood protection system at Detroit Beach, including the repair of the existing floodwalls, replenishment of toe riprap, and additional protection of the pumping stations. The catch basin drainage system behind the existing wall would also be repaired and improved as necessary to reduce build-up of water behind the wall due to wave overtopping. Because Frenchtown Township owns a portion of the real estate needed for the Section 205 project, and that some of the protection may only need improvement, the total project cost should be lower than a "new start" project. However, an October 2006 site visit by the lead structural engineer resulted in the recommendation of replacement of the older sections of existing SSP wall because of the decayed state of the seawall and that these portions of wall have exceeded their design life. There is concern that, even with rehabilitation, the older existing SSP wall would fail during a sustained flood event. As a result, this alternative will no longer be considered.

Alternative 3 – Rehabilitate and Replace Existing Flood Protection – Cantilever Steel Sheet Pile Wall:

Under this alternative, the existing SSP seawalls, except for the more previously repaired north and south edges, would be removed and replaced with more substantial PZ-22 or similar steel sheet pile (See Figure 4). An October 2006 site visit by the lead structural engineer for the project resulted in the recommendation of replacement of the older sections of existing SSP wall because of buckling, bowing and tearing of the steel and tie-backs. However, approximately 50 linear feet of wall section located at the south corner and 500 linear feet of wall section located at the north corner of the project were replaced with PZ-22 in the mid-1980s. These sections of newer wall are still in good condition which allows the proposed wall to be tied in to these sections that are to remain.

The catch basin drainage system behind the wall would also be redesigned to reduce build-up of water behind the new wall due to wave overtopping. The existing drainage system consists of steel pipe in the sheet pile with steel flap gates on the lakeside end of the pipe. Problems were noted with this system as the flap gates were stuck open or torn off due to wave and ice action and in some areas a loss of backfill was observed.

The redesigned catch basin drainage system will be backfilled with stone fill and the drainage pipes will be placed in precut holes in the sheet pile at 30 feet on center along the length of the wall. The drainage pipe will contain a mesh screen on the landside end to prevent the fill from washing out. Furthermore, the lakeside end of the pipe will contain a rubber "duck bill" type check valve which remains closed until the water in the fill builds up enough pressure to force open the valve and drain out into the lake. Refer to Appendix A-3 for a description for this type of check valve.

New riprap stone will be added to the existing stone to provide toe-protection for the new wall. The required riprap will range from 0.7 to 1.4 tons and will be placed at a 3H:1V slope right below the catch basin drainage pipe. Based on the design top of wall elevation of 579 feet IGLD85, the toe of the riprap stone is anticipated to extend toward the lake no more than 40 feet from the existing wall face.

Alternative 4 – Rehabilitate and Replace Existing Flood Protection – Anchored Steel Sheet Pile Wall:

This alternative is similar to Alternative 3, except that the SSP wall would require an anchor wall and tie-back system to provide structural support. The preliminary design analysis concluded that an anchor wall will not be necessary (Appendix A-3). Additional costs would be incurred because the existing berms would have to be undermined to install the tie backs and anchor walls. Furthermore, an anchored wall of any type will not be feasible due to the close proximity of several private structures to the wall. Therefore, this alternative will no longer be considered.

Alternative 5 – Rehabilitate and Replace Existing Flood Protection – Concrete Panel Wall with H-Piles:

With this alternative, a concrete panel wall with steel H-piles (a.k.a. post and panel wall) would be installed to act as the floodwall (See Figure 5). The H-piles would provide the structural support and concrete panels would provide the soil retention. The concrete panels would be precast and reinforced. Six inch thick, five feet high, and ten feet wide panels were assumed for cost estimating purposes. The H-pile size may change during final design, but for the purposes of this report, W16 x 67 H-piles are specified. The H-piles will be required to be driven to bedrock or refusal. This alternative is also considered be a suitable replacement for SSP. As with Alternative 3, this wall will need to be tied into the good condition SSP wall located at the north and south corners of the project.

Because the concrete panels are to be embedded only 1 to 2 ft, the existing SSP wall should be cut at the ground surface to leave in the buried portion to act as a seepage barrier. Controlled low-strength material (a.k.a. flowable fill) will be placed below the drainage pipe behind the new wall to prevent seepage between the new wall and left in place wall during a flood event. Furthermore, the flowable fill will help seal the gap between the panels and the H-piles below the ground surface. In addition, waterstops made of PVC or similar type material will be installed between the concrete panels and between the panels and H-piles to prevent seepage.

The catch basin drainage system design for this alternative is the same as proposed for Alternative 3 except that the pipe will be placed in precut holes in the concrete panels. The riprap stone placement will also be the same as proposed for Alternative 3.

At this point, it is anticipated that tiebacks will not be required. If during construction it is found that bedrock is shallower than expected, holes will have to be drilled into the rock and the H-pile will have to be grouted in place at that location.

Alternative 6 – Rehabilitate and Replace Existing Flood Protection –Steel Sheet Pile Wall with H-Piles:

This alternative is similar to Alternative 5, except that SSP would be connected to wales placed along the steel H-piles (See Figure 6). This alternative replaces the concrete panels with steel sheet piles. The H-pile size assumed for this alternative is W14 x 22. Using the H-piles reduces the depth of embedment for the sheet pile section and therefore reduces the quantity of steel required. As with Alternatives 3 and 5, this wall will also need to be tied into the existing PZ-22 SSP at the north and south corners of the project.

The catch basin drainage system design and the riprap stone placement for this alternative will also be the same as proposed for Alternative 3. Seepage control will be similar to that proposed for Alternative 5 except that no waterstops will be installed.

As with Alternative 5, it is anticipated that tiebacks will not be required. If during construction it is found that bedrock is shallower than expected, holes will have to be drilled and the H-pile will have to be grouted in place at that location.

Alternative 7 – Rehabilitate and Replace Existing Flood Protection – Concrete Gravity Wall:

This alternative consists of placing a cast in place concrete wall to act as the flood protection wall (See Figure 7). This would require extensive excavation and large quantities of reinforced concrete. Due to the close proximity of some of the existing structures to the floodwall, this alternative may not be feasible from an engineering, construction, and cost perspective at some locations. This is considered a feasible alternative overall; however, it may be cost prohibitive.

The catch basin drainage system design for this alternative would be similar to the other alternatives. The riprap stone placement will also be the same as proposed for Alternative 3. Existing SSP will be cut to 1 ft above the wall foundation surface to allow for embedment into the cast in place foundation with the buried SSP portion acting as a seepage barrier.

Alternative 8 – Rehabilitate and Replace Existing Flood Protection – Gabion Wall:

This alternative consists of placing stacked rock filled baskets, or gabions, along the shoreline. Along with riprap stone at the toe of the structure, this alternative would minimize erosion along the shoreline but it would not provide any flood protection in the event of high water. A splash apron at the top and an excavated key for scour protection would be required. This would increase construction costs considerably as well as increase O&M costs due to the typically shorter life span of the wire mesh baskets and replacement of lost stone fill due to wave and ice action. Therefore, this alternative will no longer be considered.

Alternative 9 – Rehabilitate and Replace Existing Flood Protection – Armored Slope:

This alternative consists of removing the existing wall entirely, excavation of backfill and replacement with a compacted clay blanket, geotextile, filter stone, and riprap stone (See Figure 8). The stone would be placed from the top of the existing berm at a 3H: 1V slope out toward the lake. This option would rely on the stone layers to provide the structural protection while the compacted clay blanket would minimize seepage into the protected area. No drain pipes and check valves would be required as no catchment area would be necessary. Wave overtopping would be minimal due to the higher placement of stone. Furthermore, any water from wave overtopping would naturally drain back into the lake as there would be no wall to contain the water. Filter layers under the armor stone will have to be designed to prevent soil loss and settlement due to the hydraulic pressure difference caused by wave action. This alternative may have a shorter lifespan than a structural wall so additional O&M costs for stone replacement, etc will need to be included.

Section 2 – Survey and Mapping:

A topographic survey of the project site was conducted in 1997/98. Because of a 2.6 ft discrepancy between previous design and existing survey elevations, survey control was re-established and a check survey of the site was performed in 2007 to correct this error. Top of hole elevations were also corrected on the borings logs in DPR Appendix B. The horizontal coordinate system is referenced to Michigan State Plane Coordinate System, Lambert Projection, South Zone (2113), NAD 83, US foot. The vertical coordinate system is referenced to International Great Lakes Datum 1985 (IGLD85).

Section 3 – Construction Procedures and Water Control Plan:

All construction work will be accomplished from land, ideally during low water conditions. It should be noted that construction costs will increase significantly if shoreline access is restricted due to high water. No dewatering is anticipated, therefore, a water control plan is not required.

Section 4 – Operation and Maintenance:

Operation and Maintenance (O&M) responsibilities will be transferred to the local sponsor, Detroit Beach Resort Authority, upon completion of the construction project. Any portion of the existing Advanced Measures project that is affected would be incorporated into the Section 205 project. Furthermore, a new O&M Manual would have to be developed to account for the Section 205 project features and to include any modified Advanced Measures features. See Appendix A-5 for the Advanced Measures Operation and Maintenance Manual.

All project features should be inspected annually and after flood events. Problems may arise along the lake as related to erosion and/or high water levels which may impact features of the flood control project related to the Section 205 project. Every effort should be made by the local sponsor to remediate these conditions as soon as possible. Estimated Annual Operation and Maintenance Costs are given in the DPR Appendix C.

It is anticipated that the following project features and/or conditions will need to be inspected periodically and repaired/replaced as needed.

- Levee crest elevations and side slopes must be maintained. Any material eroded or sloughed from the side slopes should be replaced in kind and compacted as normal engineering practices dictate.

- Wild growth of vegetation along the flanking levees will need to be controlled. Growth of trees on the levees and adjacent areas shall not be permitted.

- Any encroachments on the flanking levees shall also be removed and necessary repairs made to the levee.

- Check the riprap stone for movement and significant loss of stone. Any stone displaced from its original placement should be replaced in kind to prevent damage to the structure. Replenish stone as needed to maintain designed slope and configuration.

- Check condition of "duck bill" check valves and catchment area.

- The permanent right of way should be maintained free and clear of all obstructions, to facilitate inspection and repair of project features and to allow access for emergency operations.

- Other requirements as determined necessary during development of the final O & M Manual.

Section 5 – Access Roads:

Access to the Detroit Beach Section 205 project site would be via public roads, specifically from Dixie Highway, which allows direct access to the project site and on to the Right-of-Way owned by the local sponsor, Detroit Beach Resort Authority. Public parkland is available for construction access, and work and storage areas.

Section 6 – Project Security:

The project site consists of public and private lands. There are no specific security requirements for this project.

Section 7 - Summary and Recommendations:

All of the alternatives except for Alternative 1, No Federal Action, would provide some level of flood protection. The recommended alternative for the Detroit Beach/Frenchtown Section 205 project is Alternative 5 – Rehabilitate and Replace Existing Flood Protection – Concrete Panel Wall with H-Piles. This alternative is recommended because it is the most cost feasible from an engineering and construction standpoint. Other factors such as economics, real estate, environmental, etc., are discussed in other sections of the DPR. During the detailed design phase, the selected alternative may be changed due to these other project considerations and additional requirements.

The concrete panel/H-pile wall would be placed lake ward in front of the existing seawalls with an improved drainage system involving rubber "duck bill" type check valves as opposed to steel flap gates. Flowable fill would be placed below the drainage area between the existing SSP wall left in place and the new wall (Sheet 8). The flowable fill would provide seepage cutoff for the lower concrete panels. Stone will be placed in the drainage area to minimize erosion and allow free drainage of water through the pipes and check valves back into the lake.

It is important to note that the concrete panels will be "sealed in place" to minimize seepage during a flood event. In addition, a precast or cast in place concrete coping along the top of the wall is specified to cap the panels and H-piles (Sheet 8). Therefore, if damage is to occur to the concrete panels, they will not be able to be easily replaced. However, it is unlikely that any significant damage would occur because the panels will be embedded with only a portion of the top panel exposed.

Approximately 3800 linear feet of toe-protection riprap would be replenished (Sheets 4 thru 7). A five foot bench of stone will be required in front of the wall to further reduce wave impact on the wall. The stone will then slope toward the lake at a 3H: 1V slope. Placement of larger stone at the toe of the slope is recommended.

For the existing flank areas, real estate was limited in certain locations; therefore, some new wall sections will be required to avoid the high real estate cost in these areas (Sheets 9-12). The current construction estimate assumes 450 linear feet of SSP wall will be required on the south flank to eliminate the required real estate for that portion as well as stabilize the area where the existing SSP wall is failing (see photograph 2 in Appendix A-4). For the north flank, the entire existing levee section will be removed and replaced with approximately 1200 linear feet of concrete wall. The wall section was required to eliminate the potentially high real estate costs of obtaining required emergency access easements along that portion of the project. Existing levee sections not replaced by these required wall sections will be cleared of vegetation and repaired as necessary to complete the line of flood protection at the site.

US Army Corps of Engineers ®
Detroit District

APPENDIX A-1

DESIGN ALTERNATIVE CROSS-SECTIONS

Detroit Beach Section 205
Frenchtown Township, Michigan

Figure 4 - Alternative 3. Cantilever Sheet Pile Wall Typical Section

NOT TO SCALE

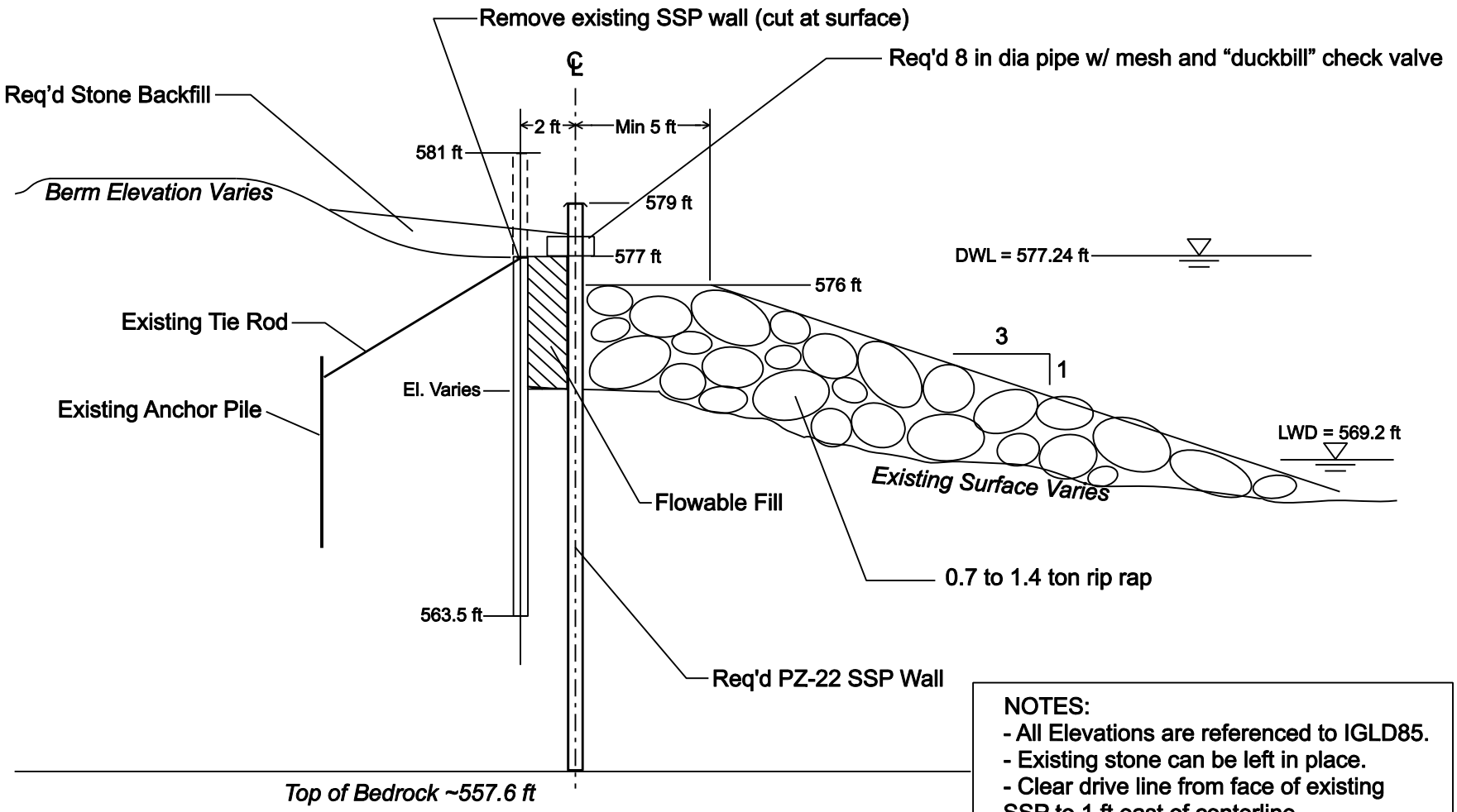

NOTES:
- All Elevations are referenced to IGLD85.
- Existing stone can be left in place.
- Clear drive line from face of existing SSP to 1 ft east of centerline.
- Existing compression struts, drainage pipes, and flap gates (not shown) are to be removed.

Figure 5 - Alternative 5. Concrete Panel/H-Pile Wall Typical Section

NOT TO SCALE

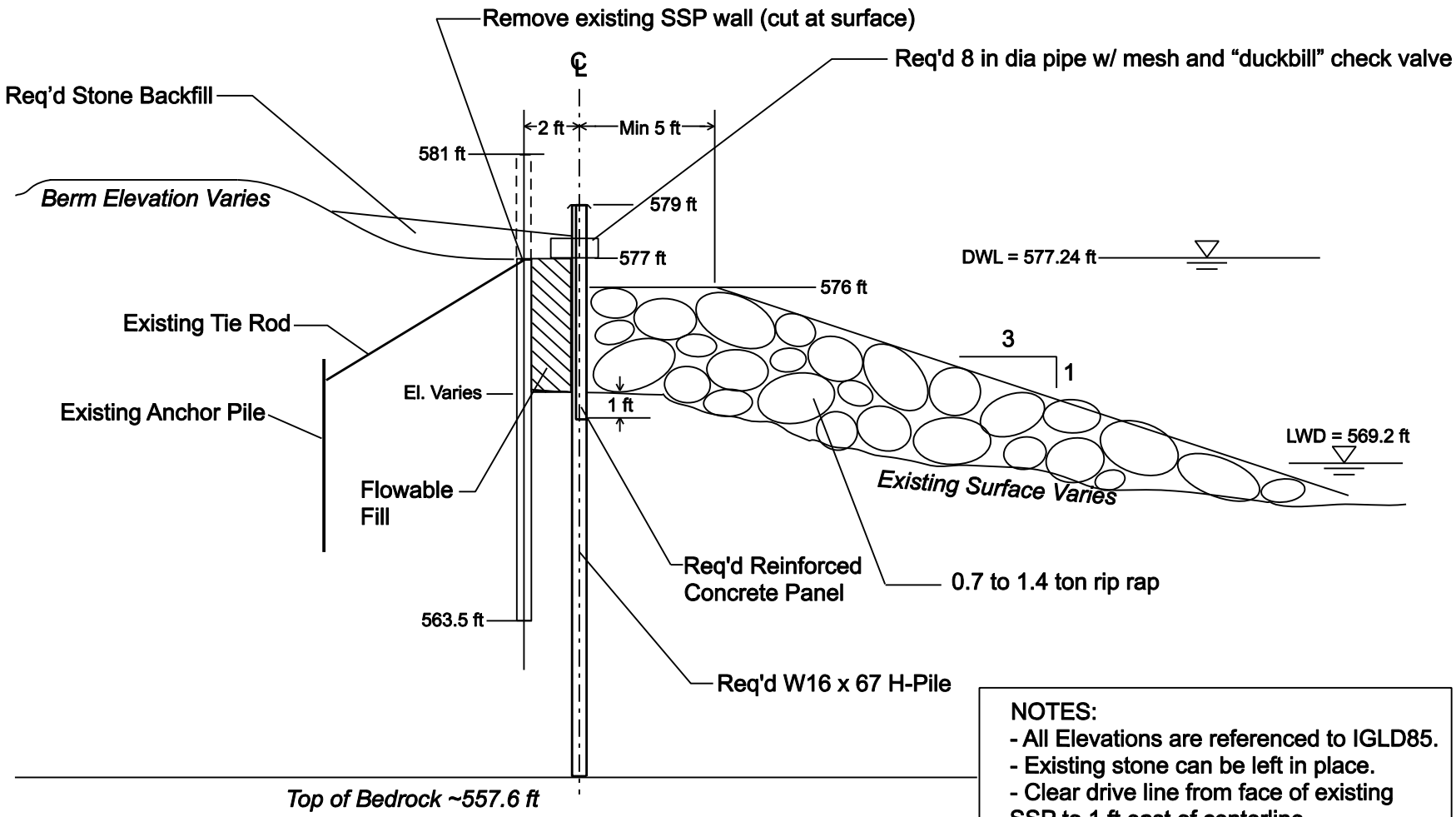

NOTES:
- All Elevations are referenced to IGLD85.
- Existing stone can be left in place.
- Clear drive line from face of existing SSP to 1 ft east of centerline.
- Existing compression struts, drainage pipes, and flap gates (not shown) are to be removed.

Figure 6 - Alternative 6. SSP/H-Pile Wall Typical Section

NOT TO SCALE

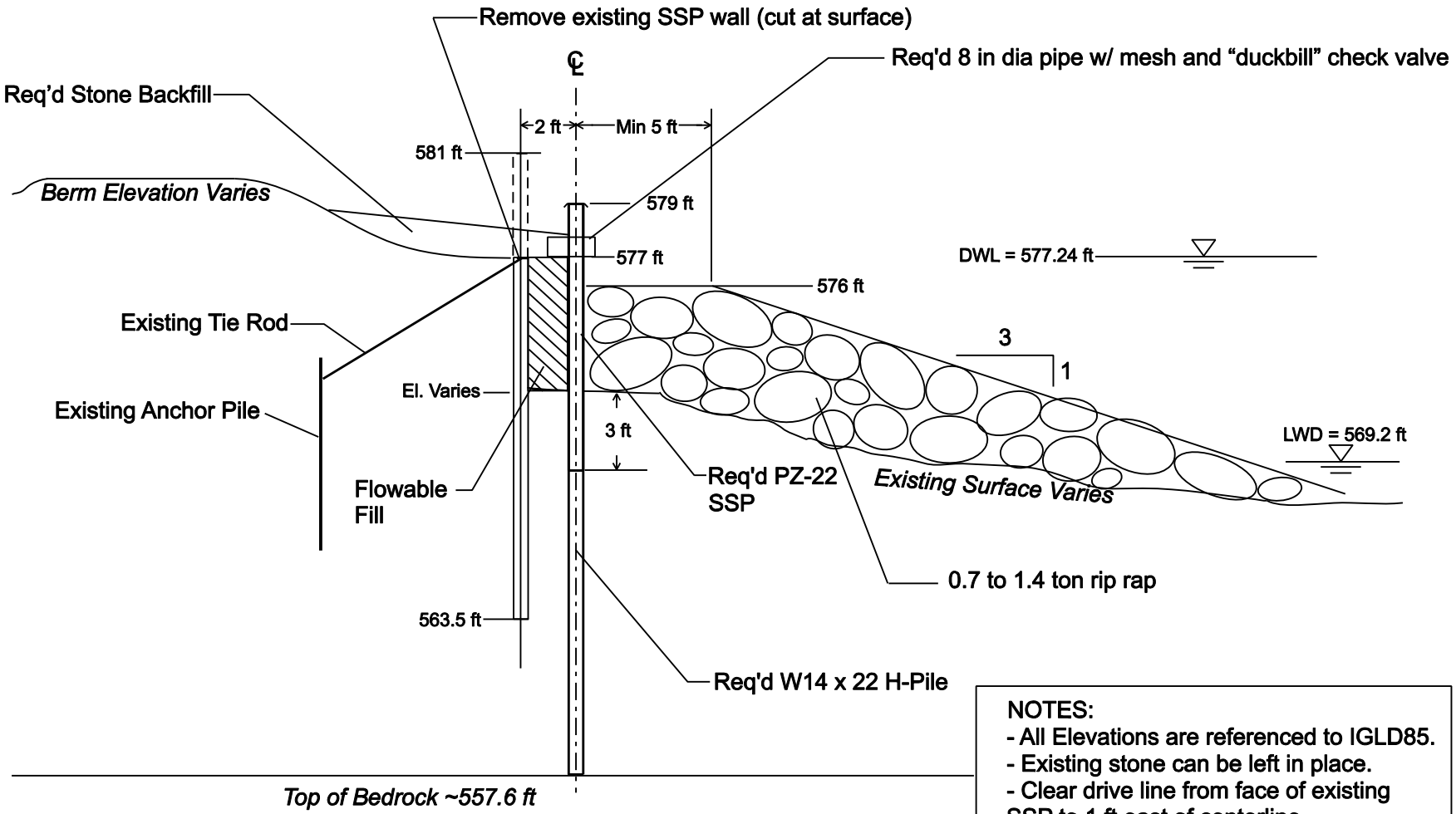

NOTES:
- All Elevations are referenced to IGLD85.
- Existing stone can be left in place.
- Clear drive line from face of existing SSP to 1 ft east of centerline.
- Existing compression struts, drainage pipes, and flap gates (not shown) are to be removed.

Figure 7 - Alternative 7. Concrete Wall Typical Section

NOT TO SCALE

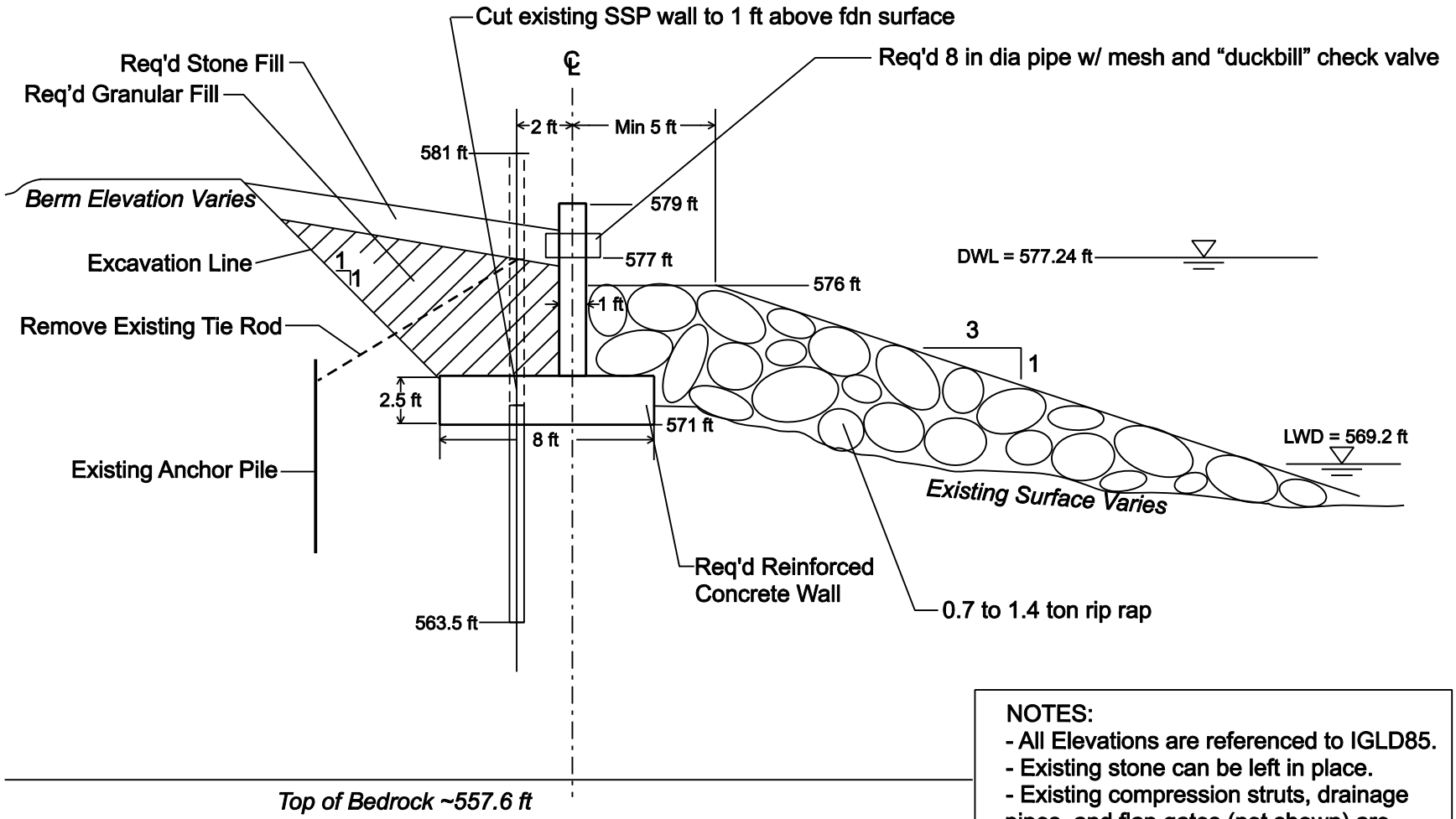

NOTES:
- All Elevations are referenced to IGLD85.
- Existing stone can be left in place.
- Existing compression struts, drainage pipes, and flap gates (not shown) are to be removed.

Figure 8 - Alternative 9. Armored Slope Typical Section

NOT TO SCALE

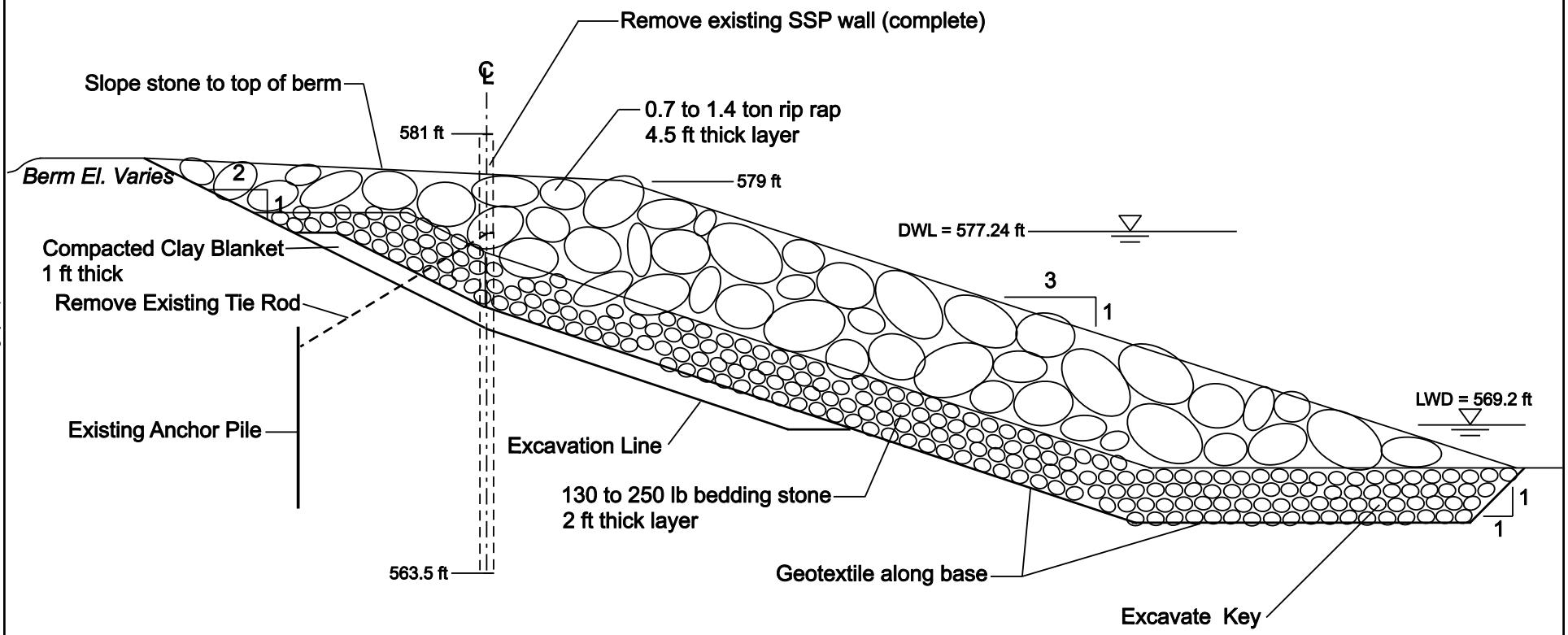

Top of Bedrock ~557.6 ft

NOTES:
- All Elevations are referenced to IGLD85.
- Existing compression struts, drainage pipes, and flap gates (not shown) are to be removed.

US Army Corps of Engineers ®
Detroit District

APPENDIX A-2

SITE DRAWINGS

Detroit Beach Section 205
Frenchtown Township, Michigan

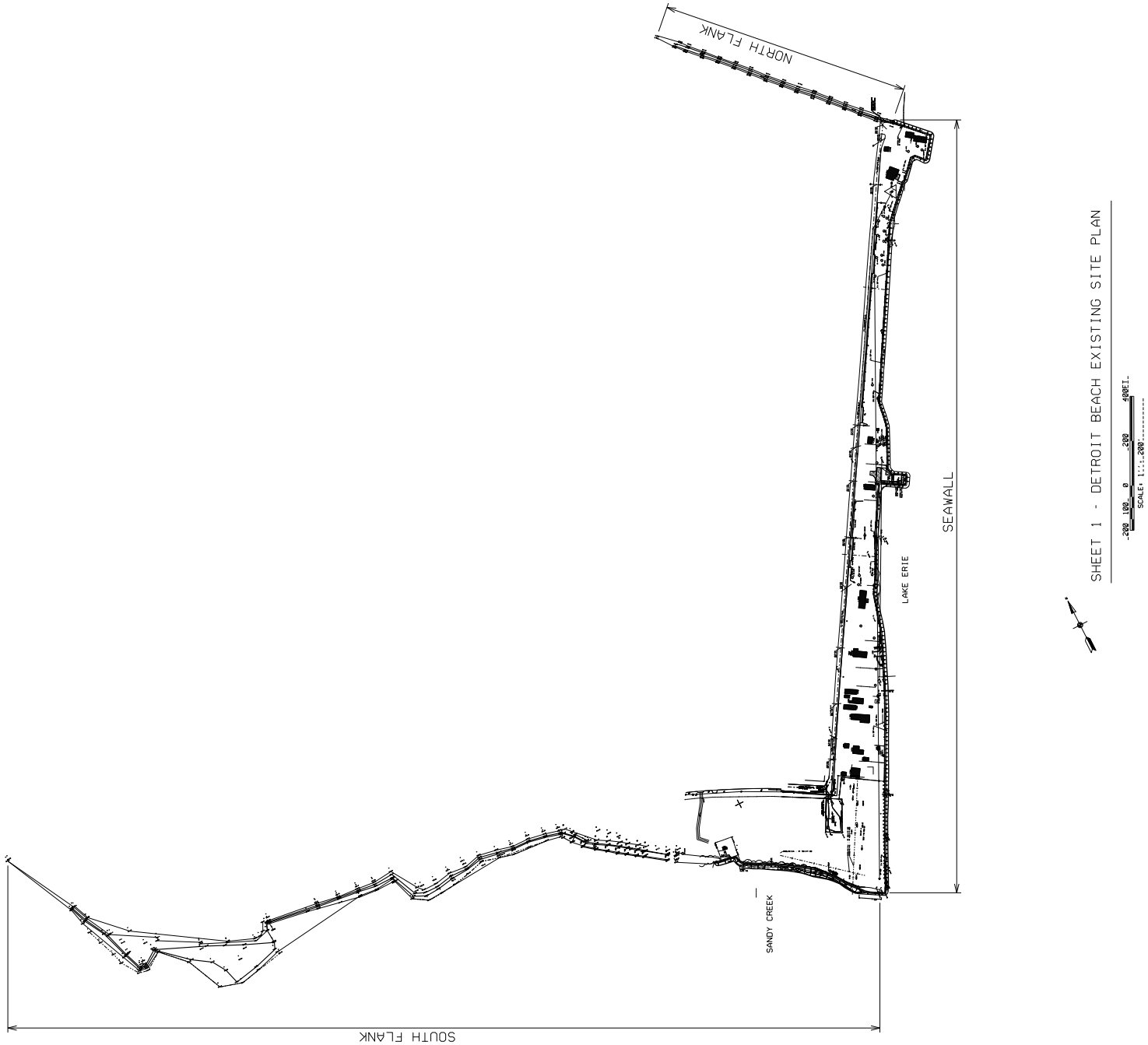
NORTH FLANK
SEAWALL
LAKE ERIE
SANDY CREEK
SOUTH FLANK
SHEET 1 - DETROIT BEACH EXISTING SITE PLAN
-200 100 0 200 400FT
SCALE: 1"=200'

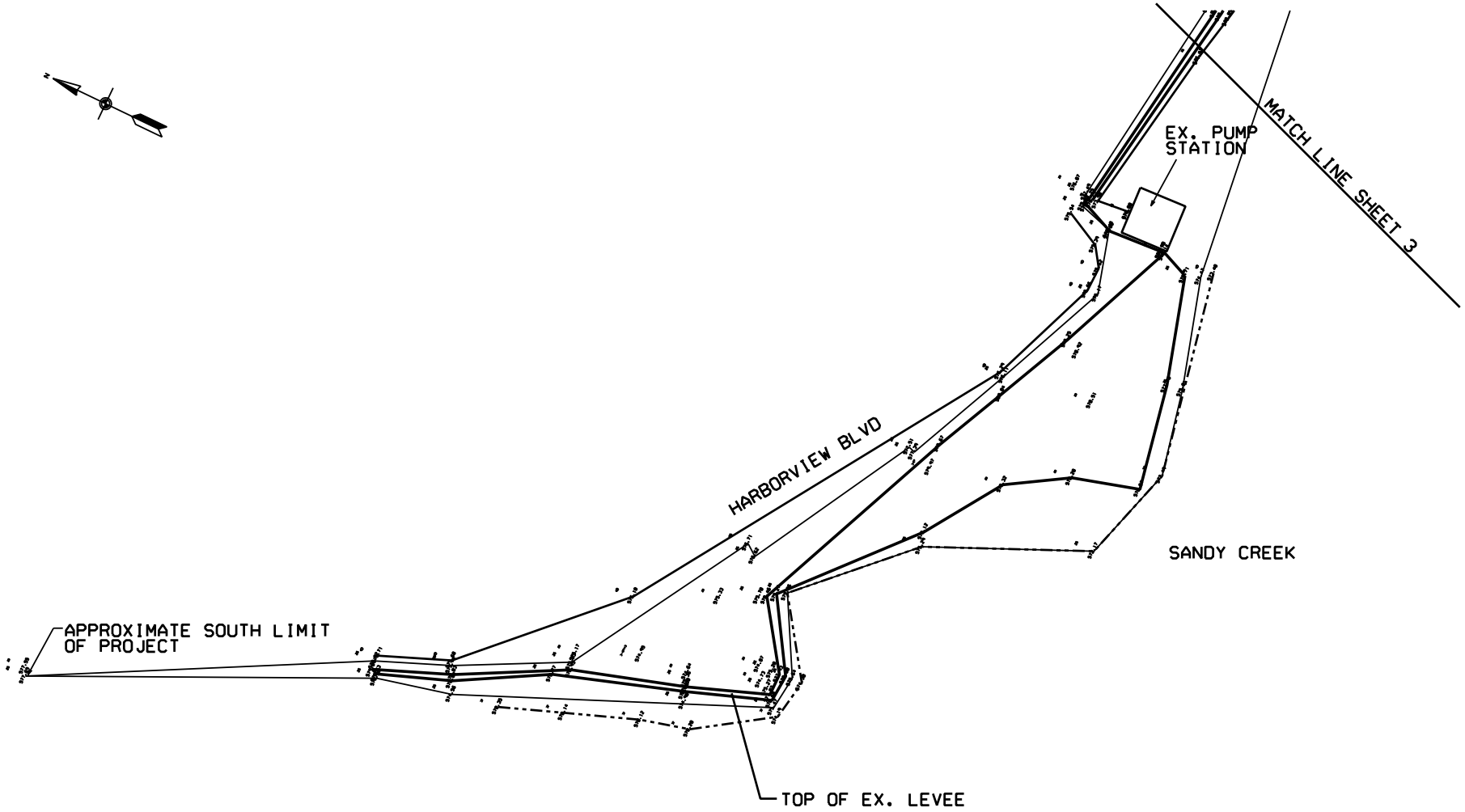

NOTES:

1. ELEVATIONS SHOWN ARE REFERENCED TO IGLD 85.

SHEET 2 - SITE PLAN SOUTH FLANK

100 50 0 100 200FT

SCALE: 1'' = 100'

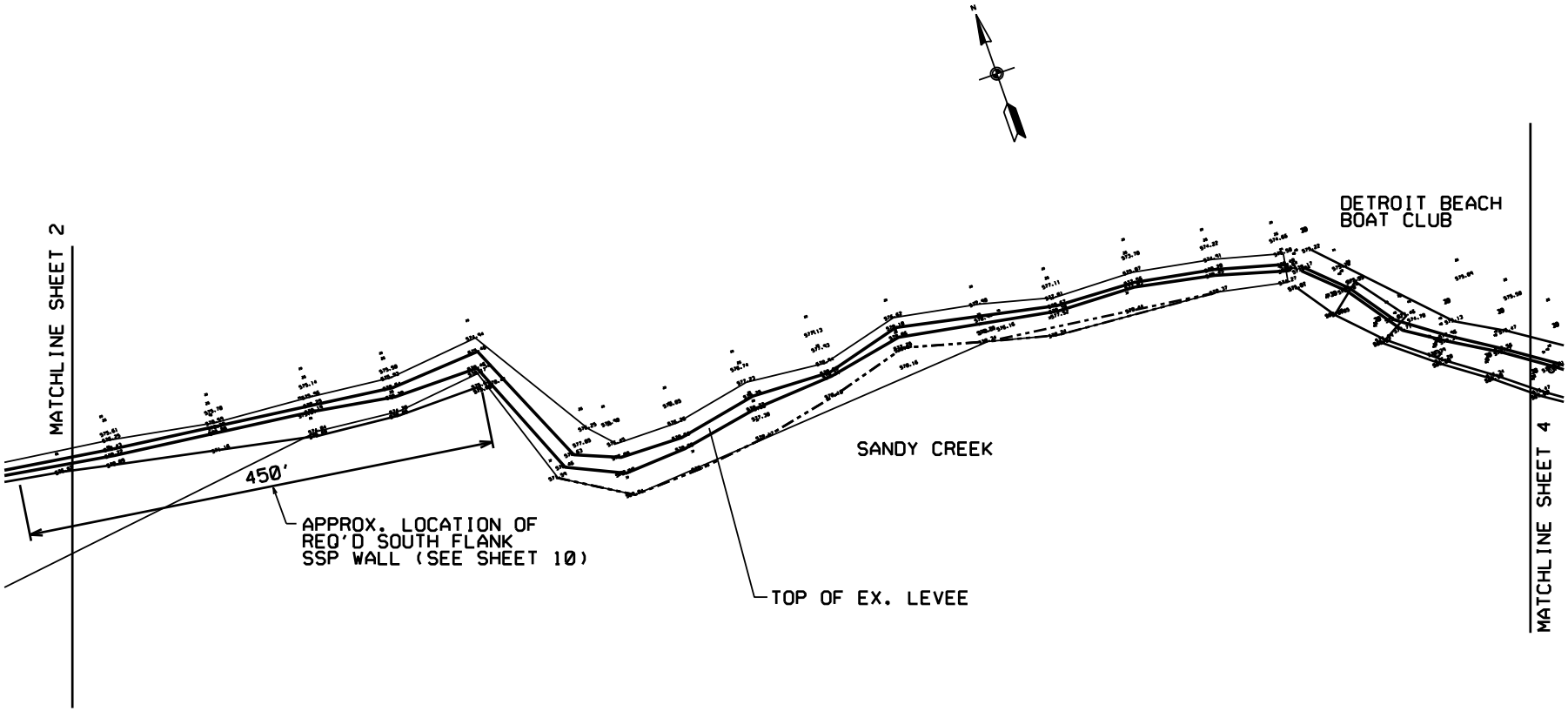

NOTES:

1. ELEVATIONS SHOWN ARE REFERENCED TO IGLD 85.

SHEET 3 - SITE PLAN SOUTH FLANK

100 50 0 100 200FT

SCALE: 1'' = 100'

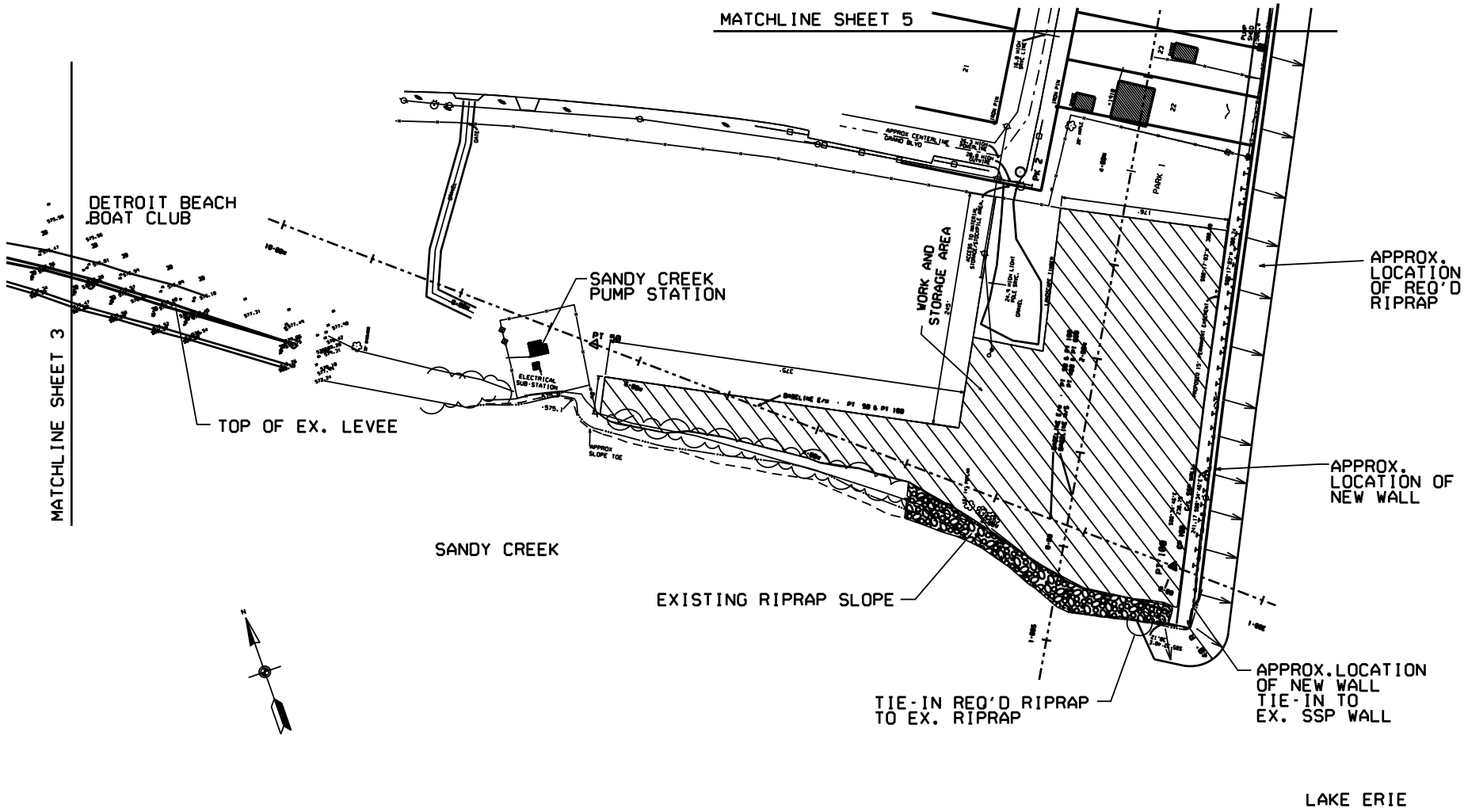

NOTES:

1. ELEVATIONS SHOWN ARE REFERENCED TO IGLD 85.

SHEET 4 - SITE PLAN SOUTHEND OF SEAWALL

100 50 0 100 200FT

SCALE: 1'' = 100'

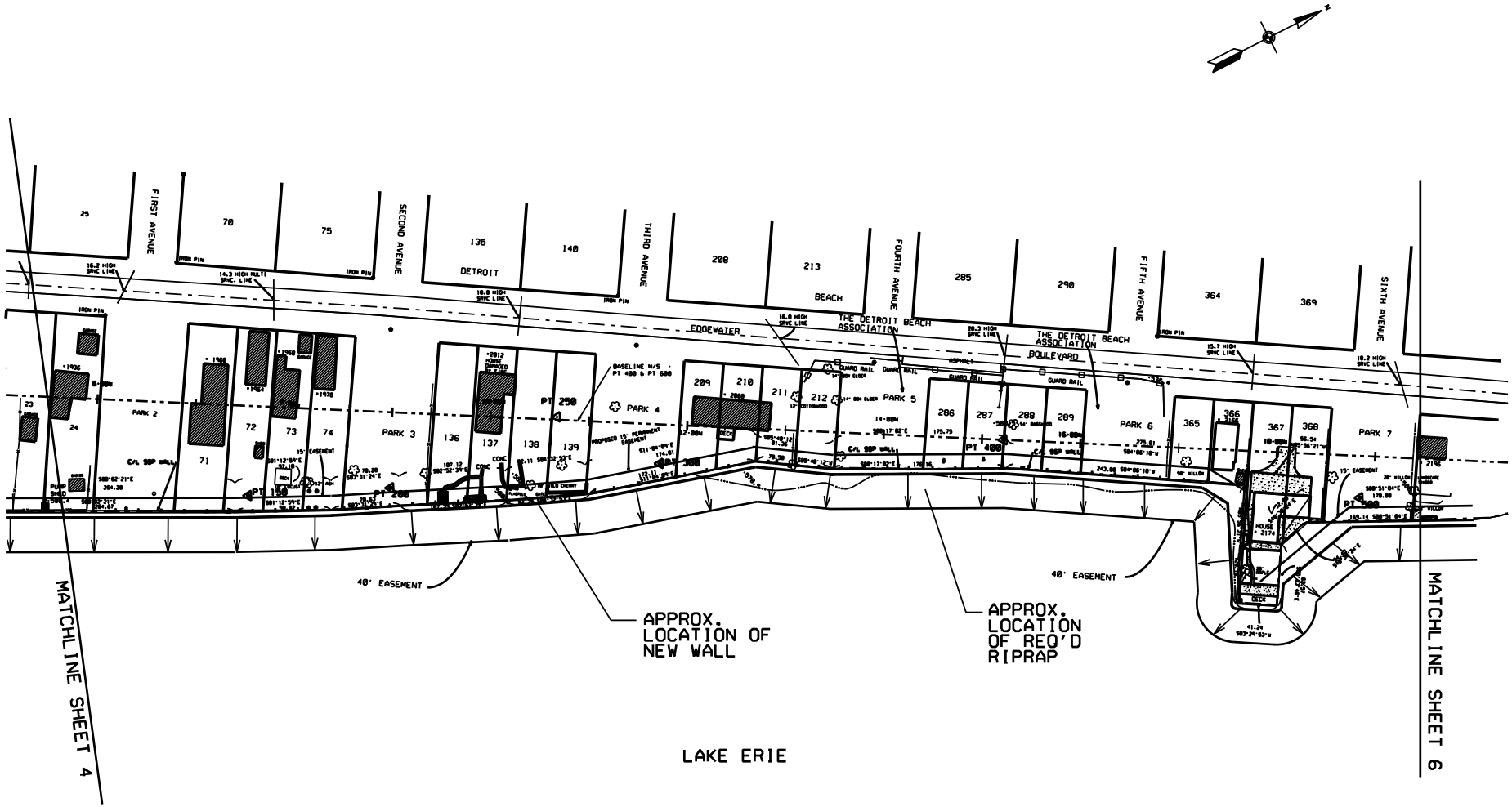

SHEET 5 - SITE PLAN SEAWALL

100 50 0 100 200FT

SCALE: 1'' = 100'

NOTES:

1. ELEVATIONS SHOWN ARE REFERENCED TO IGLD 85.

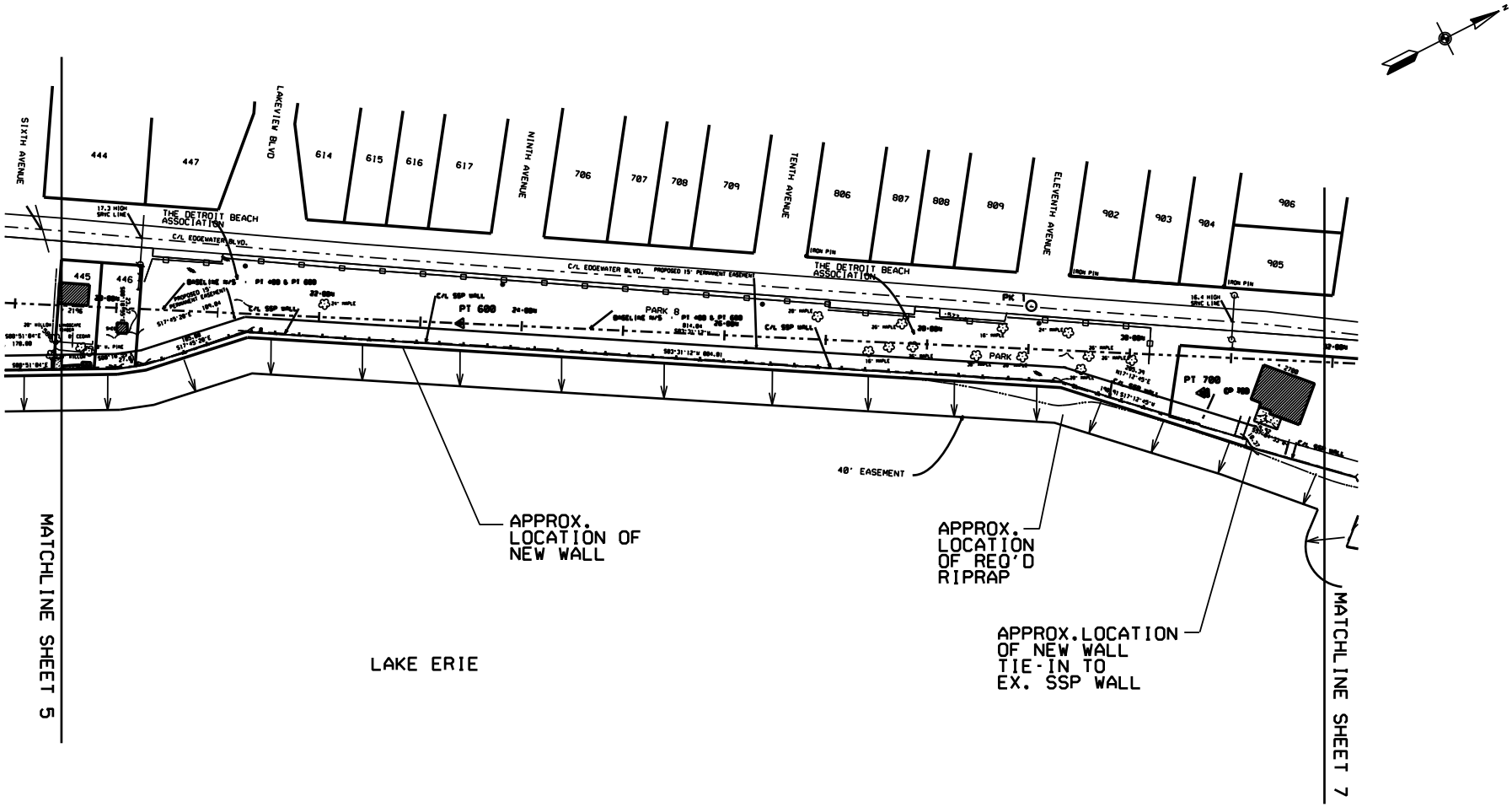

SHEET 6 - SITE PLAN SEAWALL

100 50 0 100 200FT

SCALE: 1'' = 100'

NOTES:

1. ELEVATIONS SHOWN ARE REFERENCED TO IGLD 85.

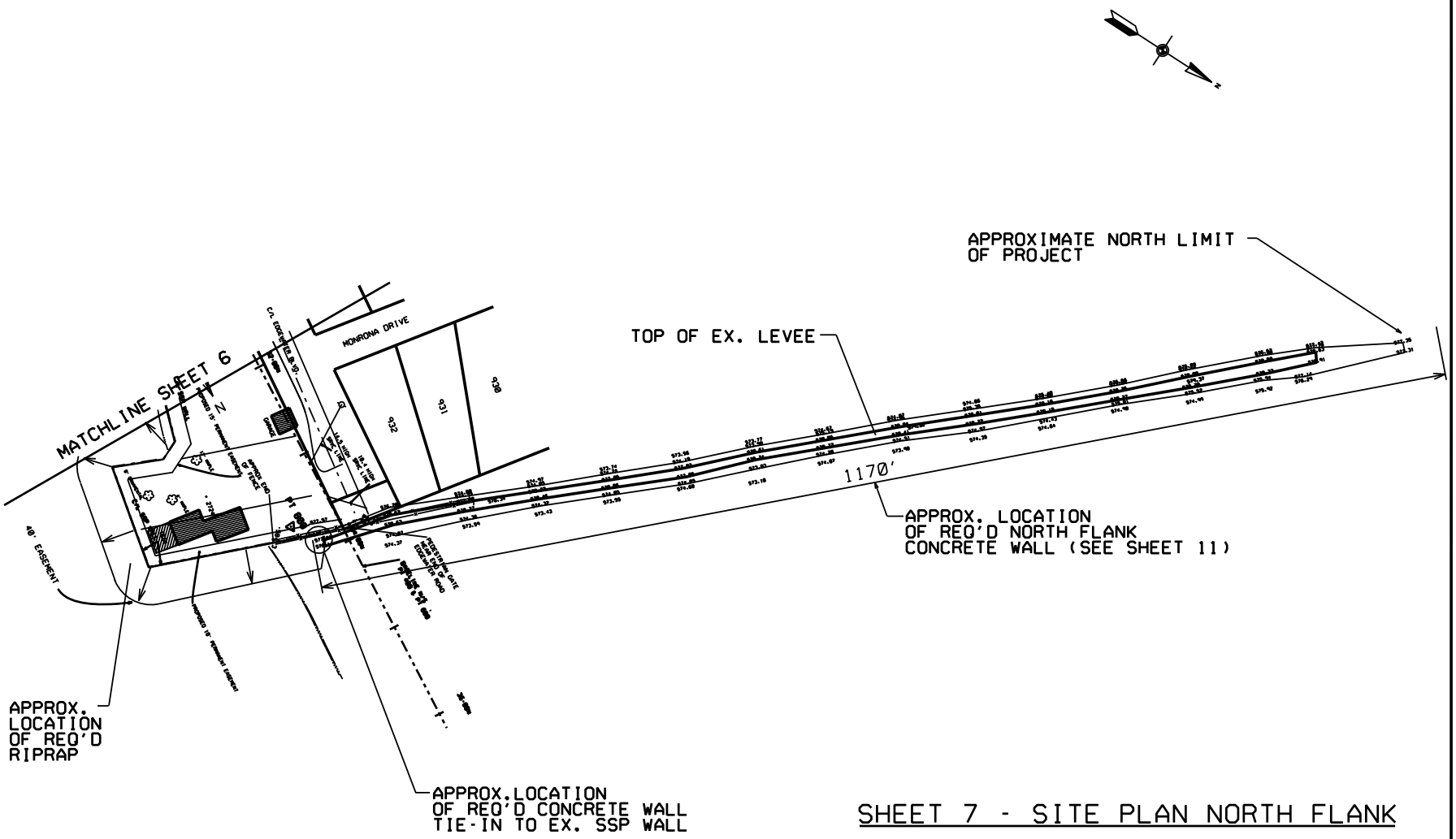

SHEET 7 - SITE PLAN NORTH FLANK

100 50 0 100 200FT

SCALE: 1'' = 100'

NOTES:

1. ELEVATIONS SHOWN ARE REFERENCED TO IGLD 85.

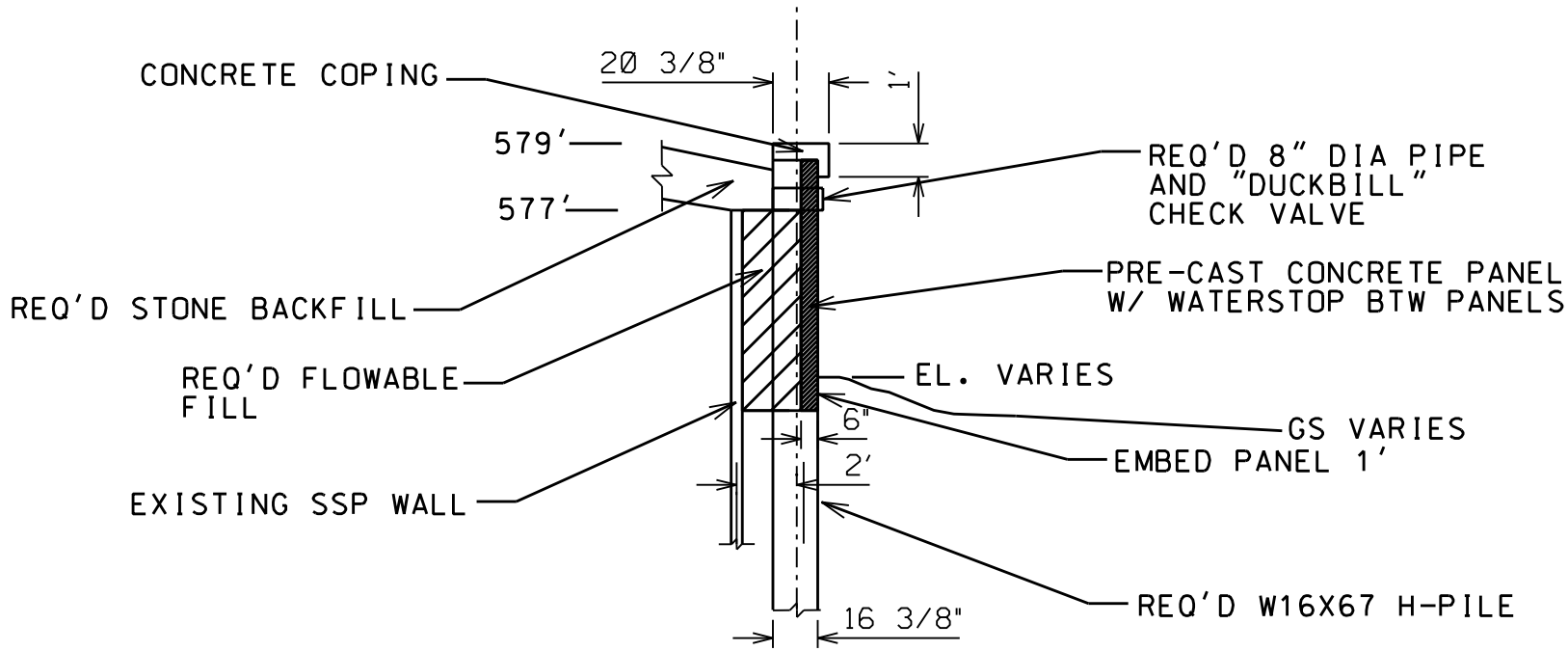

TYPICAL WALL DETAIL

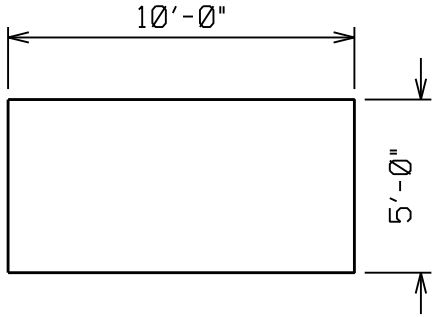

TYPICAL PRECAST CONCRETE PANEL

NOTES:

1. DRAINAGE PIPE AND CHECK VALVE ARE REQUIRED EVERY 30 FT C.C.
2. RIPRAP STONE NOT SHOWN FOR CLARITY.

SHEET 8 - SELECTED ALTERNATIVE DETAILS

SCALE: 3/16"=1'-0"

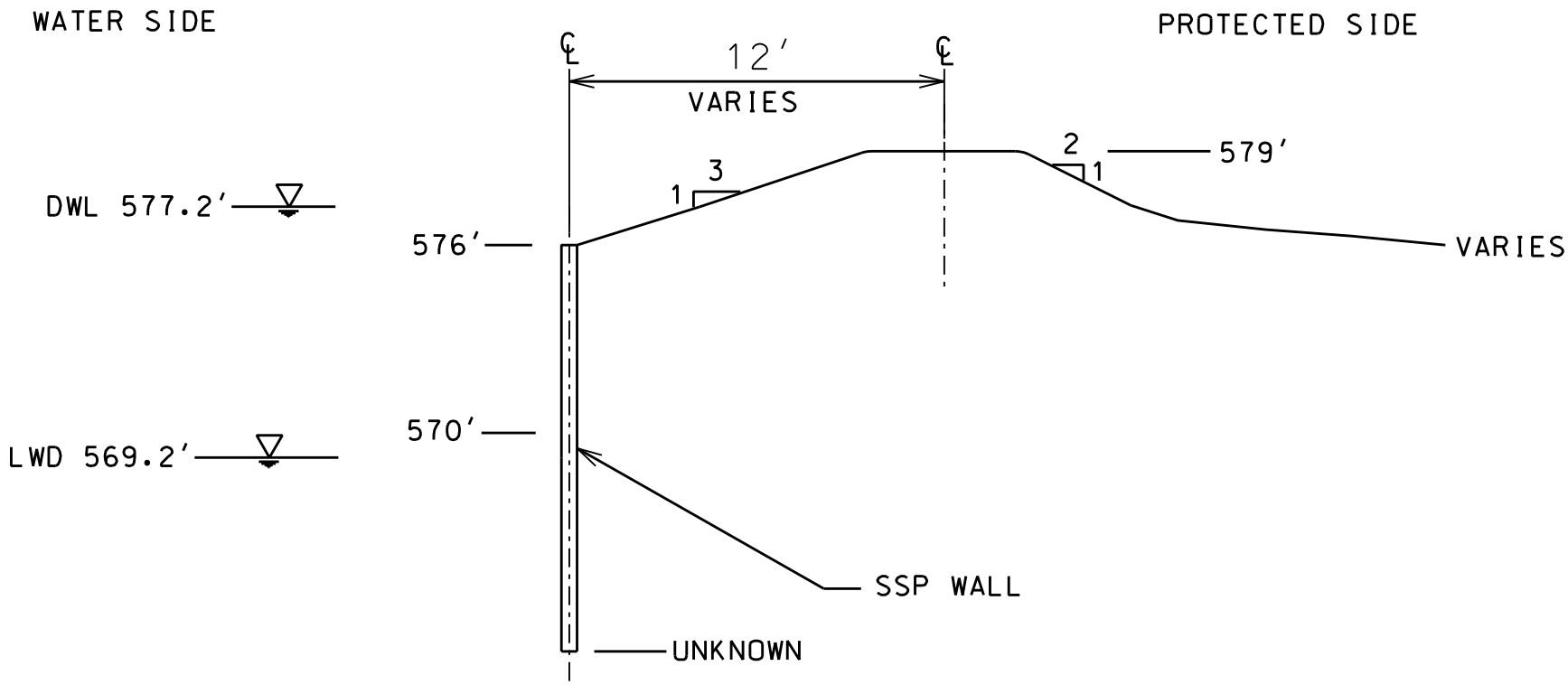

SHEET 9 - EXISTING SOUTH FLANK TYP. SECTION

SCALE: 3/16"=1'-0"

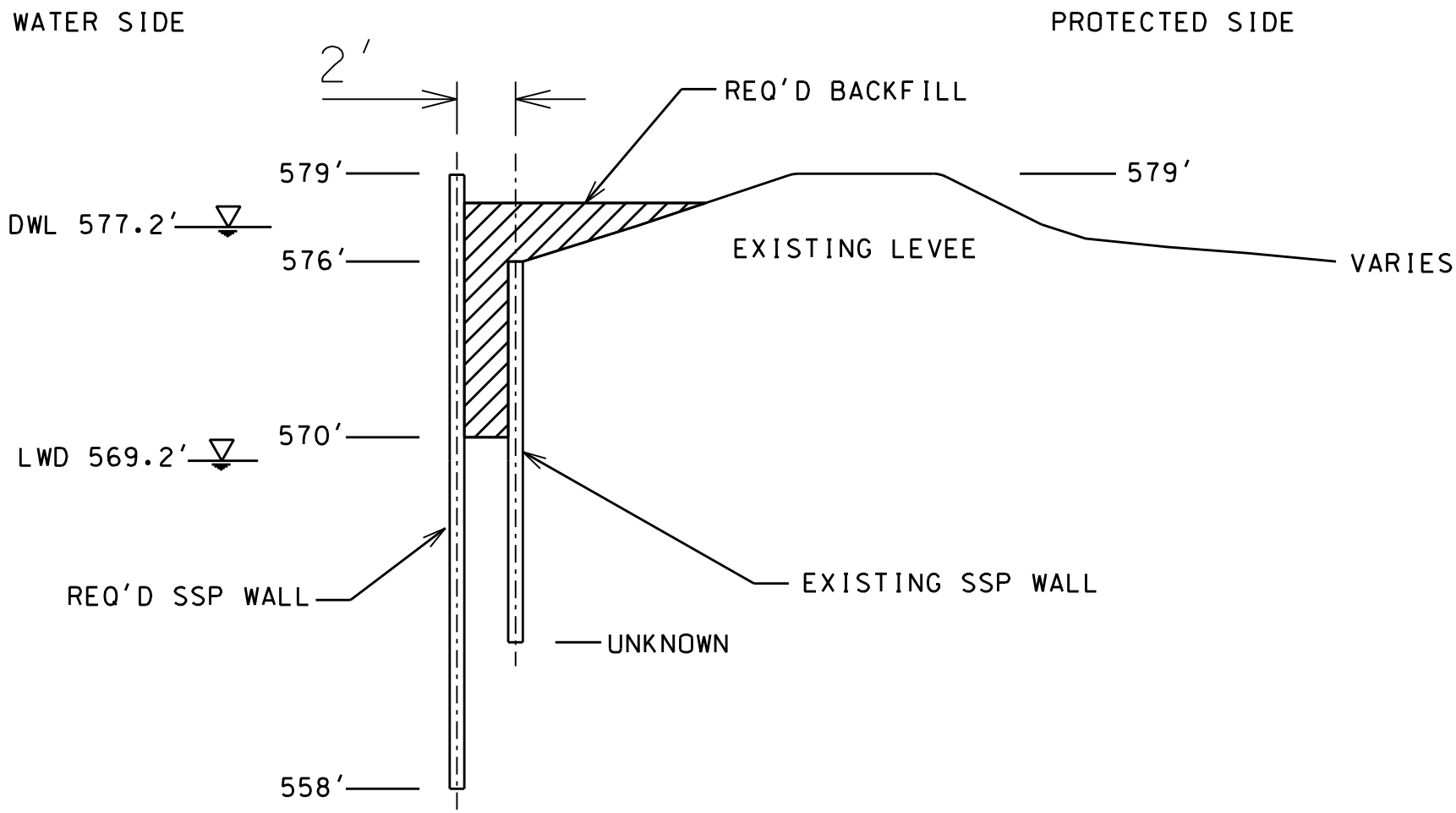

SHEET 10 - REQUIRED SOUTH FLANK TYP. SECTION

SCALE: 3/16"=1'-0"

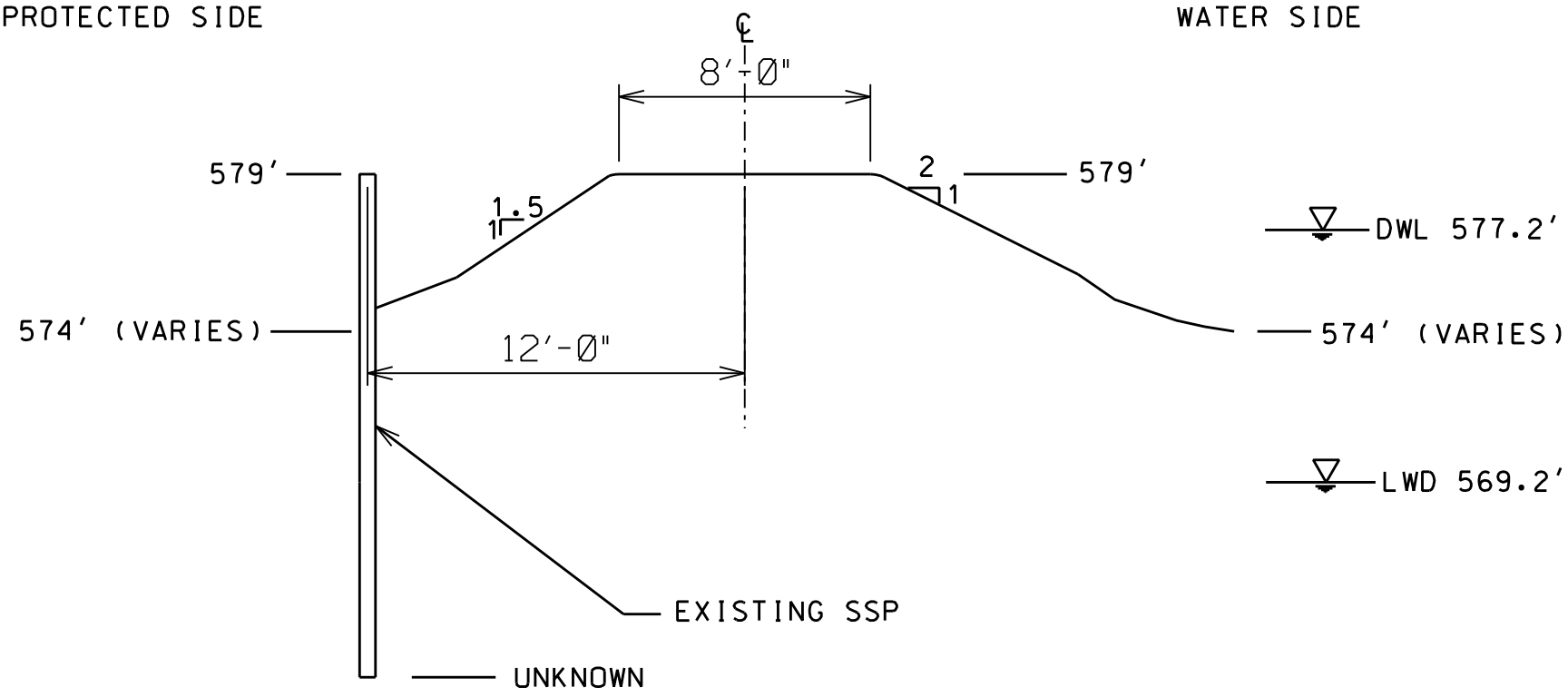

SHEET 11 - EXISTING NORTH FLANK TYP. SECTION

SCALE: 3/16"=1'-0"

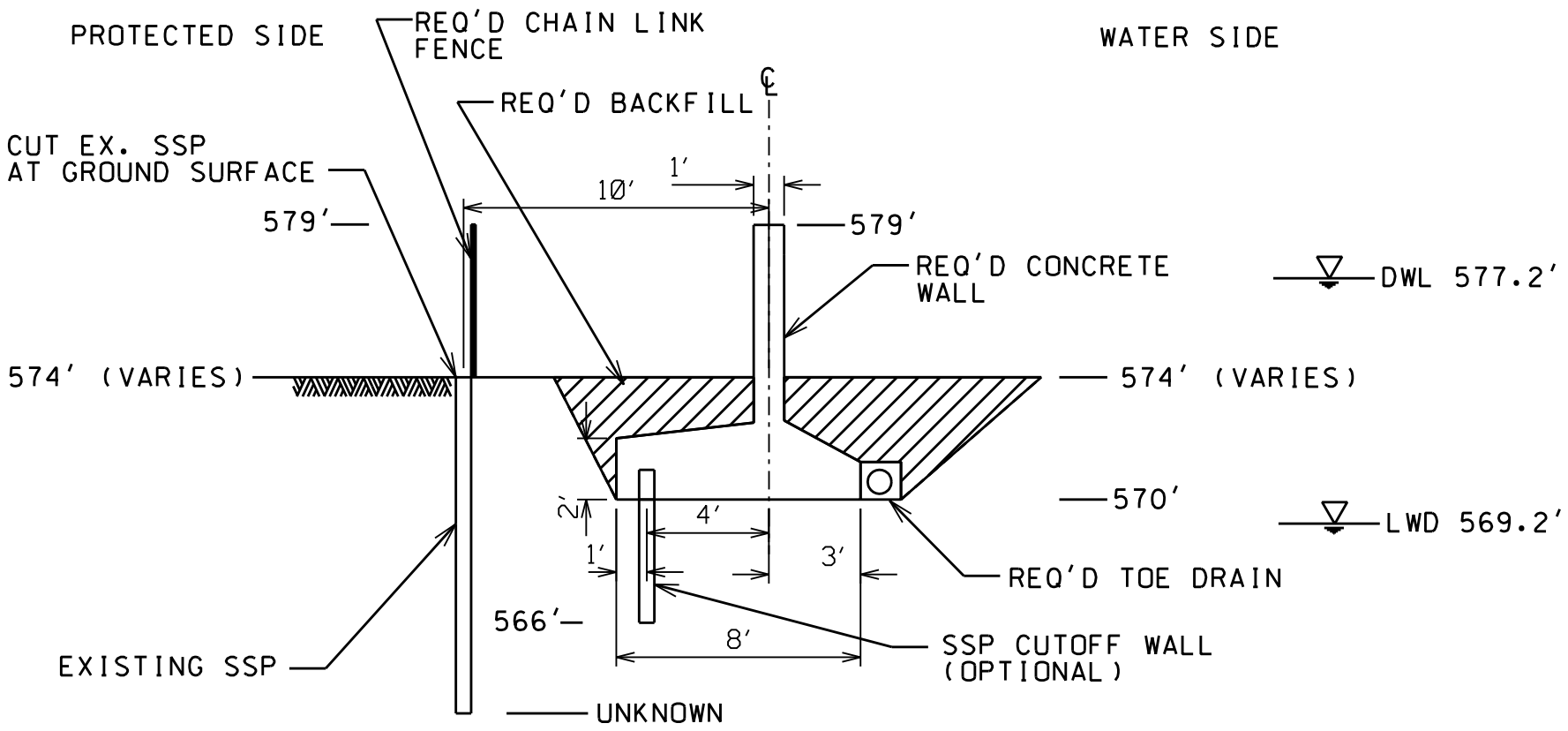

NOTE: 10 FT AREA BEHIND WALL IS FOR REQUIRED EMERGENCY ACCESS AND MUST BE KEPT CLEAR OF OBSTRUCTIONS.

SHEET 12 - REQUIRED NORTH FLANK TYP. SECTION

SCALE: 3/16"=1'-0"

US Army Corps of Engineers ®
Detroit District

APPENDIX A-3

DESIGN CALCULATIONS AND QUANTITIES

Detroit Beach Section 205
Frenchtown Township, Michigan

Frenchtown (Detroit Beach) Soil Profile

Typical Cross Section

Prepared by: SW

Checked by: JPK

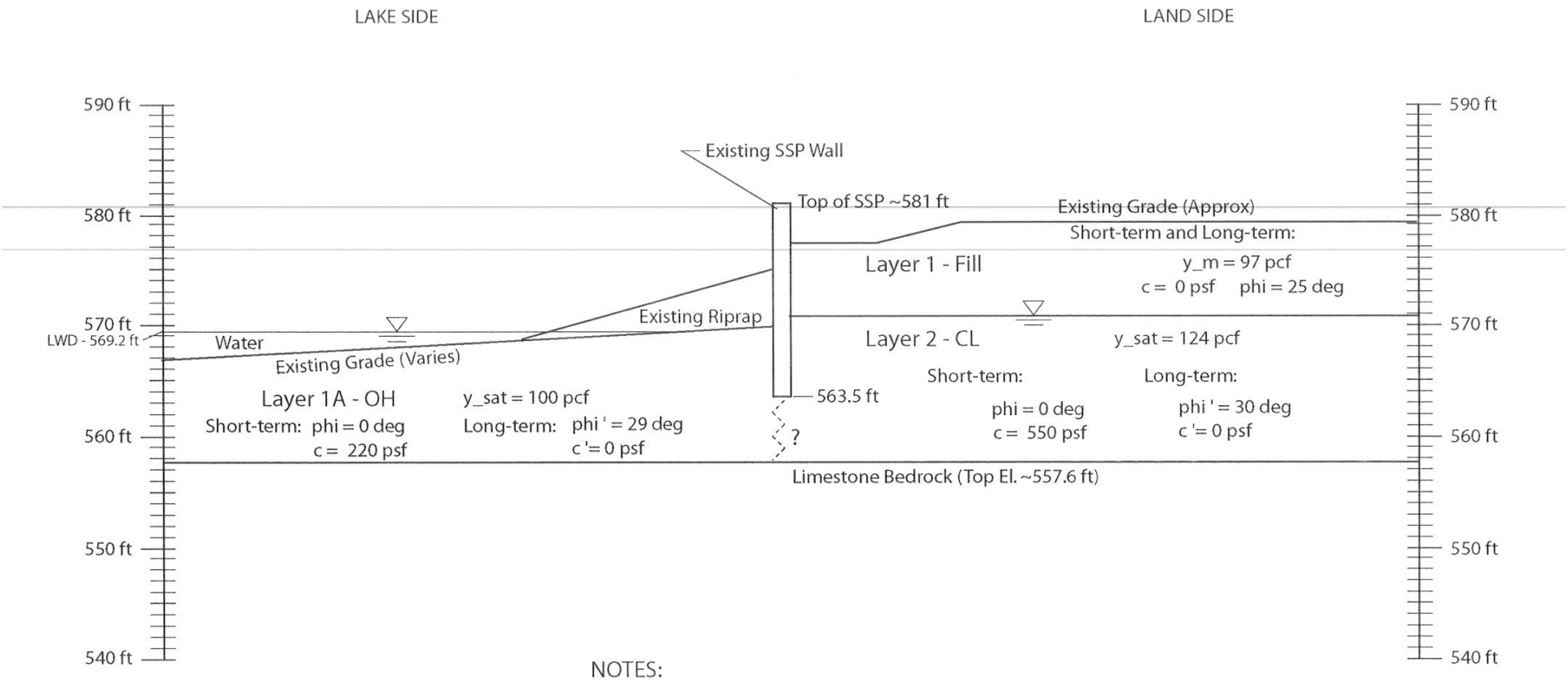

NOTES:

1) Elevations are referenced to IGLD85.
2) Quantity, size and position of riprap is variable along existing SSP wall (Recommend ignore riprap in CWALSHT).
3) Lakeside soil layer is assumed to be organic sandy clay based on older data.
4) Water level behind SSP wall is assumed to be 570.5 ft (based on log data).
5) Bedrock surface is assumed to be horizontal.

Table 1. Lab Summary Results for Frenchtown (2007)

												Undrained		Drained	
Boring	Spl #	Depth	Soil Type	Clay (%)	LL	PI	SG	w (%)	γ_d (pcf)	γ_m (pcf)	Qu (psf)	Φ (deg)	c (psf)	Φ' (deg)	c' (psf)
FT-01-07	5	10-13	ML	20.8	44	6	2.667	61.7	63.9	103.3	1072	16.6	244	40.6	67.8
	9	20-22	CL	36.5	27	11									
	10	22.5-24.5	CL		23	9									
FT-02-07	5	10-12	CH	57.2	51	31									
	7A	15-16.5	CL				2.716	19	121.1	144.1	8617				
	7B	15-18	CH	43.2	50	30		26.6	101.3	128.2					
	10	22.5-24.5	ML	40.3	18	2									
FT-03-07	5	10-13	CL				2.713	26.5	99.5	125.9	2094				
	6	12.5-15.5	CL	53.5	39	18		23.3	104.8	129.2					
	8	17.5-19.5	CL	49.1	29	12									
	11	25-27	CL	29.7	23	9									
FT-04-07	5	10-13	CL	48	46	29						18.1	216	27.7	146
	6	13-15	CH	65.2	57	35	2.713	27.7	98.2	125.4	3146				
	9	20-22	CL	37.1	26	12									
FT-05-07	5	10-13	CH	32.2	70	42		42.8	80	114.2					
								35.9	85.2	115.8	824				
	6	13-16	CL				2.709	25.9	101.3	127.5					
	7	15-17	CL		44	23									
	9	20-22	CL-ML	31.5	21	7									
			Averages	41.9	38	18	2.704	32.2	95.0	123.7	3151				

Correlations used:

Moist unit wt. -> ym = yd*(1+(w/100))

Averages by boring

	FT-1	FT-2	FT-3	FT-4	FT-5
Clay (%)	28.7	46.9	44.1	50.1	31.9
PI	9	21	13	25	24
SG	2.667	2.716	2.713	2.713	2.709
w(%)	61.7	22.8	24.9	27.7	34.9
γ_d (pcf)	63.9	111.2	102.2	98.2	88.8
Qu (psf)	1072	8617	2094	3146	824

Table 2. Layer 2 Short-term Cohesion

				UC lab data					Using Kave	
Boring	Depth	N	Ncorrect	Qu (psf)	c (psf)	Qu table*	K	K table	Qu (psf)	c (psf)
FT-01-07	10-13	11	8	1072	536	2000	134	250	1370	685
FT-02-07	15-16.5	39	29	8617	4308.7	7250	297	250	4966	2483
FT-03-07	10-13	15	11	2094	1047.2	2750	190	250	1883	942
FT-04-07	13-15	30	22	3146	1572.8	5500	143	250	3767	1883
FT-05-07	10-13	13	9	824	412.21	2250	92	250	1541	771

*Table 3-3, Bowles 1968

	1575	Kave ->	171	1353	Ave
	1596			793	SD
	778	Ave - 1/2(SD)		956	Ave - 1/2(SD)
lab c	220	Ave - 1/2(SD)	lab c	220	Ave - 1/2(SD)
combined	499		combined	588	
	This excludes Qp tests			This excludes Qp tests	

Where:

Ncorrect = 0.75 * N

K = Qu/Ncorrect

Average both -> 544 psf

Frenchtown (Detroit Beach) 205
Soil Parameters Borings Ref'd: FT-1-07, FT-2-07, FT-3-07, FT-4-07, FT-5-07, MD-14-79
Typical Section

Assumptions: yw = 62.4 pcf

Notes:
1) Values are averaged and are based on field and lab results, correlations and engineering judgment.
2) Short and Long term strengths were determined for the cohesive soil layers.

Layer 1 - Clay, Sand and Gravel Fill

Parameter	FT-1	FT-2	FT-3	FT-4	FT-5	Ave	St. Dev.	Ave-½(St. Dev.)*
Corrected N-Value[3]	5	5	7	6	6	NA	NA	NA
Moist Unit Wt from N (pcf)[1]	94.0	94.0	102.5	98.0	98.0	97.3	NA	**97**
Est. Eff. Friction Angle (deg)[1]	25.0	25.0	25.0	25.0	25.0	25.0	0.00	**25**
Long-term Cohesion (psf)	0	0	0	0	0	0	0	**0**
Relative Density[1]	0.18	0.18	0.25	0.22	0.22	NA	NA	NA

*As applicable (only for Φ and c)

Layer 1A - Organic Sandy Clay (OH)

Parameter	MD-14-79					Ave	St. Dev.	Ave-½(St. Dev.)*
Est. Sat. Unit Wt (pcf)[2]		100.3				100.3	NA	**100.3**
Specific Gravity (SG)		2.600				NA	NA	NA
Plasticity Index	52	42				NA	NA	NA
Est. Clay Fraction (%)	19.0	22.0				NA	NA	NA
Ave Water Content (%)		62.8				NA	NA	NA
Est. Eff. Friction Angle (deg)[4]	29	30				29.5	0.71	**29**
Lab Short-term Cohesion (psf)	220	220				220.0	0.00	**220**

*As applicable (only for Φ and c)

Layer 2 - Silty Clay and Silty Sand (CL and ML)

Parameter	FT-1	FT-2	FT-3	FT-4	FT-5	Ave	St. Dev.	Ave-½(St. Dev.)*
Corrected N-Value[3]	22	19	22	28	19	NA	NA	NA
Water Content (%)	61.7	22.8	24.9	27.7	34.9	NA	NA	NA
Sat. Unit Wt calc (pcf)[2]	101.7	128.5	126.2	123.4	117.2	120.0	NA	**120**
Sat. Unit Wt from N (pcf)	127.5	123.7	127.5	135.0	123.7	127.5	NA	**127**
Dry Unit Wt (pcf)	63.9	111.2	102.2	98.2	88.8	NA	NA	**NA**
Moist Unit Wt calc (pcf)[2]	103.3	136.6	127.6	125.4	119.8	122.5	NA	**123**
Specific Gravity (SG)	2.667	2.716	2.713	2.71	2.71	NA	NA	NA
Plasticity Index	9	21	13	25	24	NA	NA	NA
Ave Clay Fraction (%)	28.7	46.9	44.1	50.1	31.9	NA	NA	NA
Est. Eff. Friction Angle (deg)[4]	35	25	30	24	30	28.8	4.44	**27**
Lab Eff. Friction Angle (deg)	40.6			27.7		34.2	9.12	**30**
Est. Tot. Friction Angle (deg)	0	0	0	0	0	0.0	0.00	**0**
Lab Tot. Friction Angle (deg)	16.6			18.1		17.4	1.06	**17**
Lab Short-term Cohesion (psf)	244			216		230.0	19.80	**220**
Long-term Cohesion (psf)	67.8	0	0	146	0	53.45	69.49	**19**

*As applicable (only for Φ and c)

Typical Section Results

			Short-term		Long-term	
	y_{sat} (pcf)	y_{moist} (pcf)	phi (deg)	c (psf)	phi (deg)	c (psf)
Layer 1	**NA**	**97**	**NA**	**NA**	**25**	**0**
Layer 1A	**100**	**NA**	**0**	**220**	**29**	**0**
Layer 2	**124**	**123**	**8**	**550#**	**30**	**19**

#Derived from Table 2.

Layer 1 N-Values

	FT-1	FT-2	FT-3	FT-4	FT-5
	11	6	5	4	6
	3	6	9	17	6
			14	4	9
			10		12
Ave	7	6	10	8	8
Corrected	5	5	7	6	6

Layer 2 N-Values

	FT-1	FT-2	FT-3	FT-4	FT-5
	11	12	15	30	13
	20	13	21	20	20
	38	5	20	26	15
	47	39	57	74	51
		33	31		
		46			
Ave	29	25	29	38	25
Corrected	22	19	22	28	19

Correlations used:
Corrected N = 1.67Em*Cb*Cr*N
Em = 0.6, Cb = 1, Cr = 0.75, N = actual N
therefore Corrected N = 0.75*N
Moist unit wt. = yd*(1+w)
Sat. unit wt. = [(SG*yw)*(1+w)]/[1+(SG*w)]

Em = hammer efficiency (0.6 for safety hammer)
Cb = borehole diameter correction (1.0 for dia of 65 to 115 mm)
Cr = rod length correction (0.75 for up to 4 m rod)
SG = specific gravity
w = water content
yd = dry unit weight (pcf)

References:

[1] Bowles J.E., *Foundation Analysis and Design*, McGraw-Hill New York, 1968.
[2] Das, Braja M., *Principles of Foundation Engineering, 2nd Edition*, PWS Publishing division of Wadsworth, Inc., 1990, pgs 8-9.
[3] Day, Robert W., *Geotechnical Engineer's Portable Handbook*, McGraw-Hill, 2000, pg 2.32.
[4] Terzaghi K., Peck R.B., and Mesri G., *Soil Mechanics in Engineering Practice 3rd Edition*, Wiley-Interscience, 1996.

CELRE-ED-G

18 March 2009

MEMORANDUM FOR Record

SUBJECT: Steel Sheet Pile (SSP) Analysis for Detroit Beach – Section 205, Frenchtown Township, MI

1. A new SSP wall is being considered to replace an existing sheet pile wall at Detroit Beach in Frenchtown Township, MI. The undersigned was tasked with determining if a cantilevered wall would be a viable option at this site based on the attached soil data and cross sections. The originally analysis was accomplished in July, 2007. Since that time an error was found with the survey data used. Below are the results of the revised SSP analysis.

2. The following assumptions were made:

- High water elevation = 577.24 based on attached hydraulic analysis;
- Low water elevation = 568.2 based on attached long term average min-max levels;
- Lake bottom elevation = 571.0, see attached typical cross section;
- Top of SSP = 579.0, see attached typical cross section;
- Top of bedrock elevation = 557.6, see attached typical cross section;
- No riprap on lake side as per typical cross section notes.

The following two loading conditions were analyzed with a 150 psf snow and ice load:

- groundwater elevation and lake level at low water;
- groundwater elevation and lake level at high water.

The use of flap gates is anticipated therefore a head differential between the groundwater and the lake level was not applied.

As discussed with Ms. Tina Kowitz and Mr. Steve Wyrembelski, only the long term soil data was applied to the SSP analyses since no new fill material is expected to be placed.

3. Based on the data provided, the loading conditions listed above, and an active and passive factor of safety of 1.0 and 1.5, respectively, CWALSHT returned a minimum SSP embedment of 13.92 feet which equates to an elevation of 557.1 (see attached CWALSHT runs). While this is actually 6 inches lower than the top of bedrock elevation, it is anticipated that the top 6 inches of bedrock will be soft enough to drive SSP into it. Therefore, a cantilevered wall with flap gates is a viable option. (Note: bending moments generated by the conditions stated above were very small compared to bending capacity of the required 3/8" thick SSP sections)

4. Questions regarding this analysis should be directed to the undersigned at 62424.

Encl a/s

Heather Calappi

Heather Calappi
Geotechnical and Structural Engineer
Branch

Frenchtown (Detroit Beach) Soil Profile

Typical Cross Section

Prepared by: SW

Checked by: JWK

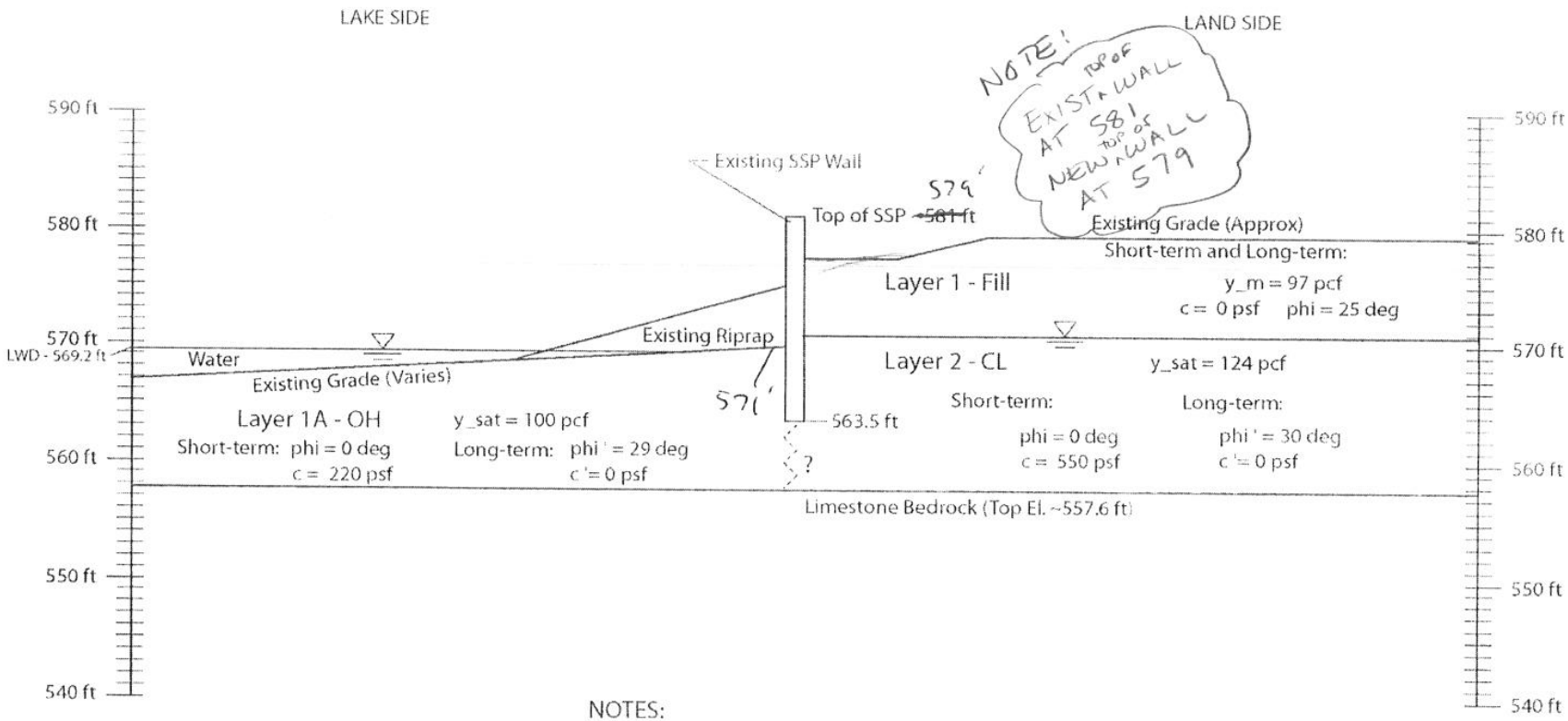

NOTES:

1) Elevations are referenced to IGLD85.
2) Quantity, size and position of riprap is variable along existing SSP wall (Recommend ignore riprap in CWALSHT).
3) Lakeside soil layer is assumed to be organic sandy clay based on older data.
4) Water level behind SSP wall is assumed to be 570.5 ft (based on log data).
5) Bedrock surface is assumed to be horizontal.

Period of Record: 1918-2006

All levels in this table are referenced to the International Great Lakes Datum of 1985 (IGLD 85)

English Units (feet)

	Jan	Feb	Mar	Apr	May	Jun	Jul	Aug	Sep	Oct	Nov	Dec
Lake Superior												
Mean	**601.5**	**601.3**	**601.2**	**601.3**	**601.6**	**601.9**	**602.1**	**602.2**	**602.2**	**602.1**	**602.0**	**601.7**
Max	602.7 1986	602.5 1986	602.4 1986	602.6 1986	602.8 1986	602.9 1986	603.1 1950	603.2 1952	603.2 1985	603.4 1985	603.3 1985	603.1 1985
Min	599.8 1926	599.6 1926	599.5 1926	599.5 1926	599.6 1926	599.9 1926	600.3 1926	600.5 1926	600.8 1926	600.7 1925	600.4 1925	600.1 1925
Lakes Michigan-Huron												
Mean	**578.5**	**578.4**	**578.5**	**578.8**	**579.1**	**579.3**	**579.4**	**579.3**	**579.2**	**578.9**	**578.7**	**578.6**
Max	581.3 1987	581.1 1986	581.1 1986	581.5 1986	581.6 1986	581.8 1986	582.0 1986	582.0 1986	582.0 1986	582.3 1986	582.0 1986	581.6 1986
Min	576.1 1965	576.1 1964	576.0 1964	576.1 1964	576.6 1964	576.6 1964	576.7 1964	576.7 1964	576.6 1964	576.4 1964	576.3 1964	576.2 1964
Lake St. Clair												
Mean	**573.6**	**573.5**	**573.8**	**574.3**	**574.5**	**574.7**	**574.8**	**574.6**	**574.4**	**574.1**	**573.9**	**573.9**
Max	576.8 1986	576.8 1986	576.8 1986	576.8 1986	576.9 1986	577.2 1986	577.2 1986	577.1 1986	576.9 1986	577.3 1986	576.8 1986	576.8 1986
Min	570.5 1936	570.5 1926	571.0 1934	571.9 1926	572.2 1934	572.3 1934	572.5 1934	572.2 1934	572.0 1934	571.8 1934	571.5 1934	571.7 1964
Lake Erie												
Mean	**570.8**	**570.8**	**571.1**	**571.6**	**571.9**	**571.9**	**571.9**	**571.7**	**571.4**	**571.1**	**570.8**	**570.8**
Max	573.7 1987	573.4 1987	573.8 1986	574.1 1985	574.0 1986	574.3 1986	574.2 1986	574.0 1986	573.6 1986	574.0 1986	573.7 1986	573.8 1986
Min	568.3 1935	568.2 1936	568.2 1934	568.8 1934	569.0 1934	569.1 1934	569.1 1934	569.0 1934	568.8 1934	568.6 1934	568.2 1934	568.2 1934
Lake Ontario												
Mean	**244.6**	**244.7**	**245.0**	**245.7**	**246.1**	**246.2**	**246.0**	**245.7**	**245.2**	**244.8**	**244.6**	**244.5**
Max	246.6 1946	246.9 1952	247.3 1952	248.2 1973	248.5 1973	248.6 1952	248.2 1947	248.0 1947	247.4 1947	246.8 1945	246.7 1945	246.7 1945
Min	242.2 1935	242.1 1936	242.6 1935	242.9 1935	243.1 1935	243.4 1935	243.2 1934	242.8 1934	242.5 1934	242.2 1934	242.0 1934	241.9 1934

Metric Units (meters)

	Jan	Feb	Mar	Apr	May	Jun	Jul	Aug	Sep	Oct	Nov	D
Lake Superior												

Mean	**183.34**	**183.28**	**183.25**	**183.27**	**183.37**	**183.46**	**183.52**	**183.55**	**183.55**	**183.52**	**183.48**	1
Max	183.70 1986	183.63 1986	183.61 1986	183.68 1986	183.74 1986	183.76 1986	183.82 1950	183.86 1952	183.86 1985	183.91 1985	183.89 1985	1 1
Min	182.83 1926	182.76 1926	182.74 1926	182.72 1926	182.76 1926	182.85 1926	182.96 1926	183.02 1926	183.12 1926	183.10 1925	183.01 1925	1 1

Lakes Michigan-Huron

Mean	**176.32**	**176.31**	**176.32**	**176.41**	**176.50**	**176.57**	**176.60**	**176.58**	**176.53**	**176.46**	**176.40**	1
Max	177.18 1987	177.11 1986	177.12 1986	177.23 1986	177.28 1986	177.33 1986	177.39 1986	177.39 1986	177.38 1986	177.50 1986	177.38 1986	1 1
Min	175.60 1965	175.59 1964	175.58 1964	175.61 1964	175.74 1964	175.76 1964	175.78 1964	175.77 1964	175.76 1964	175.70 1964	175.65 1964	1 1

Lake St. Clair

Mean	**174.84**	**174.79**	**174.90**	**175.04**	**175.12**	**175.17**	**175.19**	**175.15**	**175.09**	**175.00**	**174.91**	1
Max	175.80 1986	175.80 1986	175.80 1986	175.82 1986	175.83 1986	175.92 1986	175.93 1986	175.90 1986	175.84 1986	175.96 1986	175.82 1986	1 1
Min	173.88 1936	173.89 1926	174.05 1934	174.32 1926	174.42 1934	174.45 1934	174.50 1934	174.41 1934	174.34 1934	174.27 1934	174.18 1934	1 1

Lake Erie

Mean	**173.99**	**173.98**	**174.07**	**174.22**	**174.30**	**174.33**	**174.32**	**174.25**	**174.16**	**174.06**	**173.99**	1
Max	174.86 1987	174.78 1987	174.88 1986	174.98 1985	174.97 1986	175.04 1986	175.03 1986	174.94 1986	174.83 1986	174.94 1986	174.85 1986	1 1
Min	173.21 1935	173.18 1936	173.20 1934	173.38 1934	173.44 1934	173.45 1934	173.45 1934	173.43 1934	173.38 1934	173.30 1934	173.20 1934	1 1

Lake Ontario

Mean	**74.56**	**74.59**	**74.67**	**74.88**	**75.01**	**75.04**	**74.99**	**74.88**	**74.74**	**74.61**	**74.54**	7
Max	75.16 1946	75.27 1952	75.37 1952	75.65 1973	75.73 1973	75.76 1952	75.66 1947	75.58 1947	75.41 1947	75.22 1945	75.18 1945	7 1
Min	73.81 1935	73.78 1936	73.94 1935	74.03 1935	74.11 1935	74.19 1935	74.14 1934	74.00 1934	73.91 1934	73.82 1934	73.75 1934	7 1

COASTAL HYDRAULIC ANALYSIS

FRENCHTOWN TOWNSHIP, MI

by

U.S. ARMY CORPS OF ENGINEERS
DETROIT DISTRICT
GREAT LAKES HYDRAULICS AND HYDROLOGY BRANCH

AUGUST 1998

Frenchtown Township, MI
Coastal Hydraulic Analysis

Still Water Determination

The design water surface elevations for the Lake Erie coastline near Frenchtown Township, MI are summarized in Table 1. These elevations correspond to the still water elevation plus storm surge for the given recurrence intervals and were determined in *Design Water Level Determination of the Great Lakes*, USACE, Detroit District, 1993. The flood elevations were based on a gage analysis of data at Fermi, MI and do not include the runup component.

Recurrence Interval	Still-Water Elevation	
10 year	575.54 ft, IGLD 1955	576.16 ft, IGLD 1985
30 year	576.03 ft, IGLD 1955	576.65 ft, IGLD 1985
50 year	576.34 ft, IGLD 1955	576.96 ft, IGLD 1985
100 year	576.62 ft, IGLD 1955	577.24 ft, IGLD 1985

Table 1: Summary of flood elevations on Lake Erie near Frenchtown Township

Wave Analysis

A wave hindcast was performed and is described in *Design Wave Information for the Great Lakes, Lake Erie*, U.S. Army Corps of Engineers, Waterways Experiment Station, 1976. This analysis of wind data yielded a period of 7.5 seconds for the 20-yr deep-water significant wave of 9.8 feet. This wave height represents the largest 20-yr significant wave event for the grid point at Monroe, MI (excluding winter). Frenchtown Township is approximately two miles from Monroe. The deep-water wave must be transformed to a shallow-water wave before it can be applied in design calculations. The transformation was accomplished using the procedure in *The TMA Shallow-Water Spectrum, Description and Applications*, USACE, Waterways Experiment Station, 1984. The area of study experiences waves from angle classes 1, 2 and 3. The above design wave was from angle class 2. To determine the angle class, a bearing is measured perpendicular to the site. The Frenchtown Township bearing was determined to be 325°. This bearing and its perpendicular form an axis with the origin at Frenchtown Township. The axis is divided into three 60° arcs. Each arc represents an angle class starting with angle class 1 and increasing counter-clockwise. The depth of water at the toe of this

structure was determined to be 10.0 ft, given a 100 yr still-water level. Applying the Standard Great Lakes Wind of 40 mph, the H_s and H_{10} shallow-water waves were calculated to be 5.3 ft and 6.7 ft, respectively. The H_{10} wave represents the average wave height of the largest 10% of waves and should be used to determine stone size. The H_s wave (significant wave) represents the average wave height of the largest 1/3 of waves and is used for most other design calculations.

Wave Runup and Transmission

Due to the complex configuration (figure 1) of the proposed coastal structure, runup of the shallow water wave could not be calculated. However, this wave is expected to break in approximately 3.7 feet of water or approximately 21 feet from shore. Significant wave energy will be dissipated as the wave breaks and runs across the horizontal stone section before striking the verticle sheet pile structure. It is expected that this proposed configuration will prevent significant overtopping of the design wave.

Summary

The design wave information requested by Civil Design Section is summarized below.

- Design wave: $H_s = 5.3$ ft (20-yr wave)
  $H_{10} = 6.7$ ft (20-yr wave for stone sizing)
- 100-yr flood elevation (design still water elevation): 576.62 ft, IGLD 1955
  577.24 ft, IGLD 1985
- Water depth during 100-yr flood: 10.0 ft at toe of structure

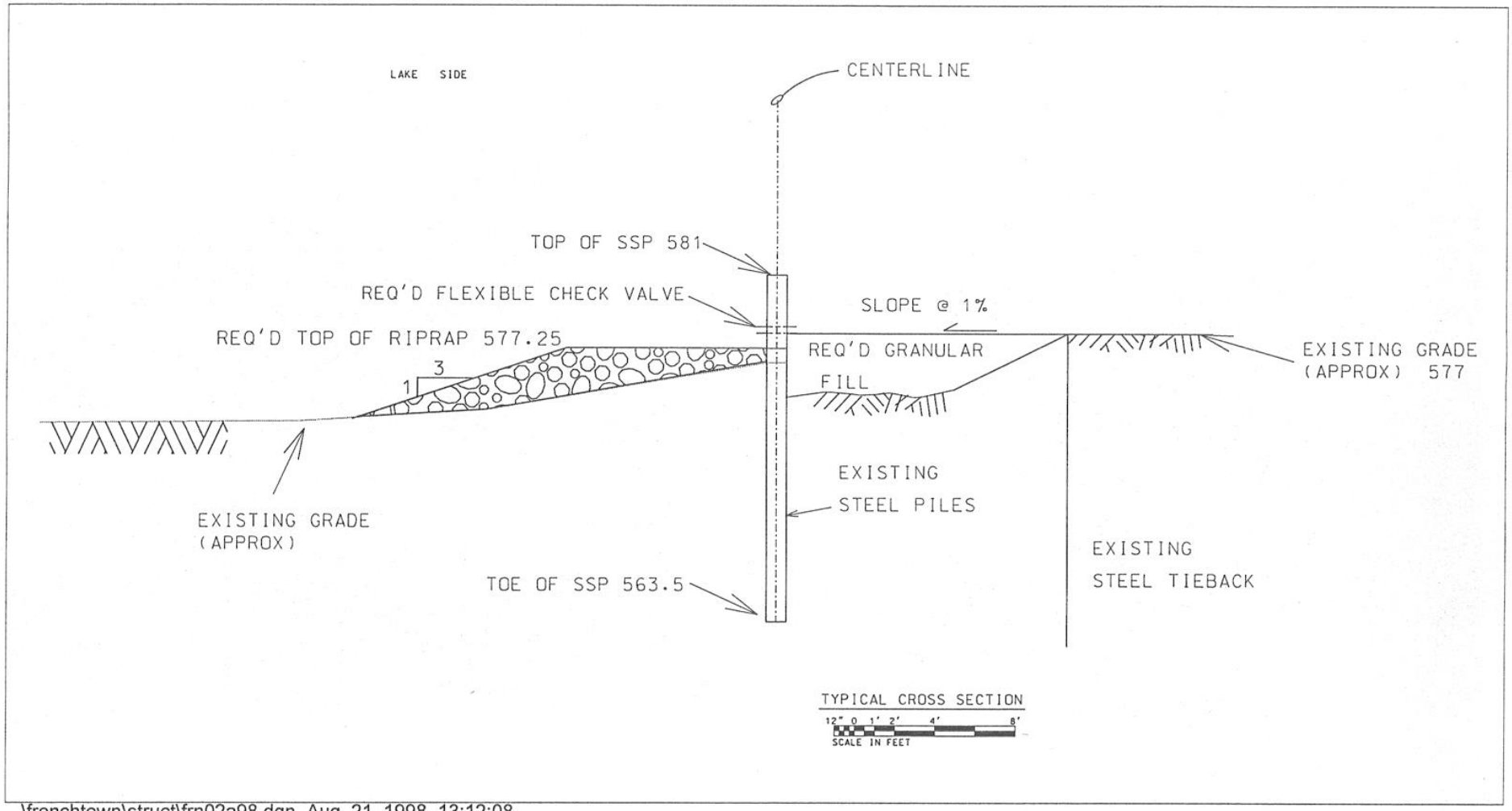

...\frenchtown\struct\frn02a98.dgn Aug. 21, 1998 13:12:08

FIGURE 1

```
PROGRAM CWALSHT-DESIGN/ANALYSIS OF ANCHORED OR CANTILEVER SHEET PILE WALLS
                          BY CLASSICAL METHODS
DATE: 18-MARCH-2009                                          TIME: 10:42:51

                          ****************
                          *  INPUT DATA  *
                          ****************

      I.--HEADING
     'FRENCHTOWN
     'CANTILEVER
     'EMBEDMENT
     'LONG-TERM SOIL DATA W/FILL BELOW TOP OF SSP AND HIGH WATER REV 18MAR09

     II.--CONTROL
        CANTILEVER WALL DESIGN
        FACTOR OF SAFETY FOR ACTIVE PRESSURES  = 1.00
        FACTOR OF SAFETY FOR PASSIVE PRESSURES = 1.50

    III.--WALL DATA
        ELEVATION AT TOP OF WALL    = 579.00 FT.

     IV.--SURFACE POINT DATA

          IV.A.--RIGHTSIDE
             DIST. FROM     ELEVATION
             WALL (FT)         (FT)
                  0.00        577.00
                 10.00        577.00
                 20.00        579.00
                 50.00        579.00

          IV.B.--LEFTSIDE
             DIST. FROM     ELEVATION
             WALL (FT)         (FT)
                  0.00        571.00
                 40.00        569.00

      V.--SOIL LAYER DATA

         V.A.--RIGHTSIDE
             LEVEL 2 FACTOR OF SAFETY FOR ACTIVE PRESSURE  = DEFAULT
             LEVEL 2 FACTOR OF SAFETY FOR PASSIVE PRESSURE = DEFAULT

                ANGLE OF         ANGLE OF                        <-SAFETY->
  SAT.   MOIST  INTERNAL  COH-     WALL    ADH-    <--BOTTOM-->  <-FACTOR->
 WGHT.   WGHT.  FRICTION  ESION  FRICTION  ESION   ELEV.  SLOPE  ACT. PASS.
 (PCF)   (PCF)    (DEG)   (PSF)    (DEG)   (PSF)   (FT)  (FT/FT)
 97.00   97.00    25.00    0.00     0.00    0.00  571.00   0.00   DEF  DEF
124.00  124.00    30.00    0.00     0.00    0.00                   DEF  DEF

         V.B.--LEFTSIDE
             LEVEL 2 FACTOR OF SAFETY FOR ACTIVE PRESSURE  = DEFAULT
             LEVEL 2 FACTOR OF SAFETY FOR PASSIVE PRESSURE = DEFAULT

                ANGLE OF         ANGLE OF                        <-SAFETY->
  SAT.   MOIST  INTERNAL  COH-     WALL    ADH-    <--BOTTOM-->  <-FACTOR->
 WGHT.   WGHT.  FRICTION  ESION  FRICTION  ESION   ELEV.  SLOPE  ACT. PASS.
 (PCF)   (PCF)    (DEG)   (PSF)    (DEG)   (PSF)   (FT)  (FT/FT)
100.00  100.00    29.00    0.00     0.00    0.00                   DEF  DEF

     VI.--WATER DATA
        UNIT WEIGHT         = 62.40 (PCF)
                                  Page 1
```

```
RIGHTSIDE ELEVATION = 577.24 (FT)
LEFTSIDE ELEVATION  = 577.24 (FT)
NO SEEPAGE

 VII.--VERTICAL SURCHARGE LOADS

     VII.A.--VERTICAL LINE LOADS
          NONE

     VII.B.--VERTICAL UNIFORM LOADS
               LEFTSIDE     RIGHTSIDE
                 (PSF)        (PSF)
                  0.00        150.00

     VII.C.--VERTICAL STRIP LOADS
          NONE

     VII.D.--VERTICAL RAMP LOADS
          NONE

     VII.E.--VERTICAL TRIANGULAR LOADS
          NONE

     VII.F.--VERTICAL VARIABLE LOADS
          NONE

VIII.--HORIZONTAL LOADS
     NONE
```

```
PROGRAM CWALSHT-DESIGN/ANALYSIS OF ANCHORED OR CANTILEVER SHEET PILE WALLS
                          BY CLASSICAL METHODS
DATE: 18-MARCH-2009                                          TIME: 10:42:54

                          **************************
                          *   SOIL PRESSURES FOR   *
                          * CANTILEVER WALL DESIGN *
                          **************************

 I.--HEADING
  'FRENCHTOWN
  'CANTILEVER
  'EMBEDMENT
  'LONG-TERM SOIL DATA W/FILL BELOW TOP OF SSP AND HIGH WATER REV 18MAR09

II.--SOIL PRESSURES

     RIGHTSIDE SOIL PRESSURES DETERMINED BY FIXED SURFACE WEDGE METHOD.

     LEFTSIDE SOIL PRESSURES DETERMINED BY FIXED SURFACE WEDGE METHOD.

                                 <------NET------>
      NET    <---LEFTSIDE--->     (SOIL + WATER)     <--RIGHTSIDE--->
ELEV. WATER  PASSIVE   ACTIVE    ACTIVE   PASSIVE    ACTIVE   PASSIVE
(FT)  (PSF)   (PSF)    (PSF)     (PSF)     (PSF)     (PSF)     (PSF)
```

579.0	0.0	0.0	0.0	0.0	0.0	0.0	0.0
578.0	0.0	0.0	0.0	0.0	0.0	0.0	0.0
577.2	0.0	0.0	0.0	0.0	0.0	0.0	0.0
577.0+	0.0	0.0	0.0	0.0	0.0	0.0	0.0
577.0-	0.0	0.0	0.0	60.9	276.7	60.9	276.7
576.0	0.0	0.0	0.0	74.9	340.5	74.9	340.5
575.0	0.0	0.0	0.0	89.0	404.3	89.0	404.3
574.0	0.0	0.0	0.0	103.0	468.1	103.0	468.1
573.0	0.0	0.0	0.0	117.4	530.1	117.4	530.1
572.0	0.0	0.0	0.0	128.7	604.2	128.7	604.2
571.0	0.0	0.0	0.0	133.8	728.4	133.8	728.4
570.0	0.0	72.3	12.7	69.9	910.3	142.2	922.9
569.0	0.0	144.6	25.3	15.2	1125.6	159.8	1150.9
568.7	0.0	166.1	29.1	0.0	1185.6	166.1	1214.7
568.0	0.0	216.9	38.0	-36.1	1328.1	180.8	1366.1
567.0	0.0	289.2	50.7	-87.9	1521.6	201.3	1572.3
566.0	0.0	361.5	63.4	-139.7	1714.0	221.9	1777.3
565.0	0.0	433.8	76.0	-191.4	1861.0	242.4	1937.0
564.0	0.0	506.1	88.7	-243.2	1954.4	262.9	2043.1
563.0	0.0	578.4	101.4	-295.0	2057.4	283.5	2158.7
562.0	0.0	650.7	114.1	-347.0	2181.0	303.8	2295.0
561.0	0.0	723.1	126.7	-397.1	2303.1	326.0	2429.8
560.0	0.0	795.4	139.4	-444.2	2425.1	351.1	2564.5
559.0	0.0	867.7	152.1	-491.8	2547.2	375.9	2699.2
558.0	0.0	940.0	164.7	-540.1	2669.0	399.8	2833.8
557.0	0.0	1012.3	177.4	-587.5	2789.5	424.7	2967.0
556.0	0.0	1084.6	190.1	-634.5	2908.2	450.0	3098.3
555.0	0.0	1156.9	202.8	-681.6	3026.1	475.3	3228.9
554.0	0.0	1229.2	215.4	-728.6	3144.1	500.5	3359.5
553.0	0.0	1301.5	228.1	-775.8	3262.1	525.7	3490.2
552.0	0.0	1373.8	240.8	-823.0	3380.1	550.8	3620.9
551.0	0.0	1446.1	253.5	-870.3	3498.1	575.8	3751.5
550.0	0.0	1518.4	266.1	-917.7	3616.0	600.7	3882.2
549.0	0.0	1590.7	278.8	-965.2	3734.0	625.5	4012.8
548.0	0.0	1663.0	291.5	-1012.6	3852.0	650.4	4143.5
547.0	0.0	1735.3	304.2	-1059.8	3970.0	675.5	4274.2
546.0	0.0	1807.6	316.8	-1108.7	4088.0	698.9	4404.8
545.0	0.0	1879.9	329.5	-1161.5	4206.0	718.4	4535.5
544.0	0.0	1952.2	342.2	-1215.6	4324.0	736.7	4666.2
543.0	0.0	2024.5	354.8	-1268.2	4442.0	756.3	4796.8
542.0	0.0	2096.9	367.5	-1320.4	4560.0	776.5	4927.5
541.0	0.0	2170.9	380.2	-1374.2	4678.0	796.7	5058.1
540.0	0.0	2247.3	392.9	-1430.5	4795.9	816.8	5188.8

PROGRAM CWALSHT-DESIGN/ANALYSIS OF ANCHORED OR CANTILEVER SHEET PILE WALLS
BY CLASSICAL METHODS

DATE: 18-MARCH-2009 TIME: 10:42:54

```
****************************
*  SUMMARY OF RESULTS FOR  *
*  CANTILEVER WALL DESIGN  *
****************************
```

I.--HEADING

Page 3

```
  'FRENCHTOWN
  'CANTILEVER
  'EMBEDMENT
  'LONG-TERM SOIL DATA W/FILL BELOW TOP OF SSP AND HIGH WATER REV 18MAR09

II.--SUMMARY

     RIGHTSIDE SOIL PRESSURES DETERMINED BY FIXED SURFACE WEDGE METHOD.

     LEFTSIDE SOIL PRESSURES DETERMINED BY FIXED SURFACE WEDGE METHOD.

WALL BOTTOM ELEV. (FT)     :      557.08
      PENETRATION (FT)     :       13.92

MAX. BEND. MOMENT (LB-FT)  :  5.9596E+03
      AT ELEVATION (FT)    :      563.29

MAX. SCALED DEFL. (LB-IN^3):  1.4529E+09
      AT ELEVATION (FT)    :      579.00

          NOTE:  DIVIDE SCALED DEFLECTION MODULUS OF
                 ELLASTICITY IN PSI TIMES PILE MOMENT
                 OF INERTIA IN IN^4 TO OBTAIN DEFLECTION
                 IN INCHES.
```

PROGRAM CWALSHT-DESIGN/ANALYSIS OF ANCHOREDOR CANTILEVER SHEET PILE WALLS
BY CLASSICAL METHODS

DATE: 18-MARCH-2009 TIME: 10:42:54

```
*****************************
* COMPLETE OF RESULTS FOR   *
*  CANTILEVER WALL DESIGN   *
*****************************

 I.--HEADING
 'FRENCHTOWN
 'CANTILEVER
 'EMBEDMENT
 'LONG-TERM SOIL DATA W/FILL BELOW TOP OF SSP AND HIGH WATER REV 18MAR09

 II.--RESULTS
```

ELEVATION (FT)	BENDING MOMENT (LB-FT)	SHEAR (LB)	SCALED DEFLECTION (LB-IN^3)	NET PRESSURE (PSF)
579.00	0.0000E+00	0.	1.4529E+09	0.00
578.00	-1.7462E-10	0.	1.3520E+09	0.00
577.24	-3.3142E-09	0.	1.2753E+09	0.00
577.00+	-4.6417E-09	0.	1.2511E+09	0.00
577.00-	-1.9838E-11	0.	1.2511E+09	60.88
576.00	3.2780E+01	68.	1.1502E+09	74.92
575.00	1.4048E+02	150.	1.0493E+09	88.96
574.00	3.3715E+02	246.	9.4870E+08	103.01
573.00	6.3688E+02	356.	8.4870E+08	117.43
572.00	1.0535E+03	479.	7.4981E+08	128.66
571.00	1.5978E+03	610.	6.5277E+08	133.84
570.00	2.2644E+03	712.	5.5850E+08	69.86
569.00	3.0024E+03	755.	4.6816E+08	15.23
568.70	3.2267E+03	757.	4.4230E+08	0.00

568.00	3.7562E+03	744.	3.8300E+08	-36.12
567.00	4.4738E+03	682.	3.0433E+08	-87.89
566.00	5.1035E+03	569.	2.3338E+08	-139.66
565.00	5.5936E+03	403.	1.7123E+08	-191.43
564.00	5.8922E+03	186.	1.1872E+08	-243.20
563.00	5.9476E+03	-83.	7.6351E+07	-294.97
562.00	5.7081E+03	-404.	4.4219E+07	-346.96
561.00	5.1218E+03	-776.	2.1901E+07	-397.09
560.00	4.1390E+03	-1197.	8.3758E+06	-444.22
559.00	2.7119E+03	-1665.	1.9391E+06	-491.77
558.69	2.1643E+03	-1822.	1.0089E+06	-506.96
558.00	9.0565E+02	-1688.	1.2232E+05	898.93
557.08	0.0000E+00	0.	0.0000E+00	2779.59

NOTE: DIVIDE SCALED DEFLECTION MODULUS OF ELLASTICITY IN PSI TIMES PILE MOMENT OF INERTIA IN IN^4 TO OBTAIN DEFLECTION IN INCHES.

III.--WATER AND SOIL PRESSURES

		<----------SOIL PRESSURES---------->			
	WATER	<----LEFTSIDE----->		<---RIGHTSIDE---->	
ELEVATION (FT)	PRESSURE (PSF)	PASSIVE (PSF)	ACTIVE (PSF)	ACTIVE (PSF)	PASSIVE (PSF)
579.00	0.	0.	0.	0.	0.
578.00	0.	0.	0.	0.	0.
577.24	0.	0.	0.	0.	0.
577.00+	0.	0.	0.	0.	0.
577.00-	0.	0.	0.	61.	277.
576.00	0.	0.	0.	75.	340.
575.00	0.	0.	0.	89.	404.
574.00	0.	0.	0.	103.	468.
573.00	0.	0.	0.	117.	530.
572.00	0.	0.	0.	129.	604.
571.00	0.	0.	0.	134.	728.
570.00	0.	72.	13.	142.	923.
569.00	0.	145.	25.	160.	1151.
568.70	0.	166.	29.	166.	1215.
568.00	0.	217.	38.	181.	1366.
567.00	0.	289.	51.	201.	1572.
566.00	0.	362.	63.	222.	1777.
565.00	0.	434.	76.	242.	1937.
564.00	0.	506.	89.	263.	2043.
563.00	0.	578.	101.	283.	2159.
562.00	0.	651.	114.	304.	2295.
561.00	0.	723.	127.	326.	2430.
560.00	0.	795.	139.	351.	2564.
559.00	0.	868.	152.	376.	2699.
558.69	0.	890.	156.	383.	2742.
558.00	0.	940.	165.	400.	2834.
557.08	0.	1012.	177.	425.	2967.
556.00	0.	1085.	190.	450.	3098.

```
PROGRAM CWALSHT-DESIGN/ANALYSIS OF ANCHORED OR CANTILEVER SHEET PILE WALLS
                          BY CLASSICAL METHODS
DATE: 18-MARCH-2009                                          TIME: 10:45:41

                            ****************
                            *  INPUT DATA  *
                            ****************

      I.--HEADING
     'FRENCHTOWN
     'CANTILEVER
     'EMBEDMENT
     'LONG-TERM SOIL DATA W/FILL BELOW TOP OF SSP AND LOW WATER REV 18MAR09

     II.--CONTROL
        CANTILEVER WALL DESIGN
        FACTOR OF SAFETY FOR ACTIVE PRESSURES  = 1.00
        FACTOR OF SAFETY FOR PASSIVE PRESSURES = 1.50

    III.--WALL DATA
        ELEVATION AT TOP OF WALL    = 579.00 FT.

     IV.--SURFACE POINT DATA

          IV.A.--RIGHTSIDE
             DIST. FROM     ELEVATION
             WALL (FT)         (FT)
                  0.00        577.00
                 10.00        577.00
                 20.00        579.00
                 50.00        579.00

          IV.B.--LEFTSIDE
             DIST. FROM     ELEVATION
             WALL (FT)         (FT)
                  0.00        571.00
                 40.00        569.00

      V.--SOIL LAYER DATA

         V.A.--RIGHTSIDE
             LEVEL 2 FACTOR OF SAFETY FOR ACTIVE PRESSURE  = DEFAULT
             LEVEL 2 FACTOR OF SAFETY FOR PASSIVE PRESSURE = DEFAULT

                ANGLE OF         ANGLE OF                        <-SAFETY->
  SAT.   MOIST  INTERNAL  COH-     WALL    ADH-    <--BOTTOM-->  <-FACTOR->
 WGHT.   WGHT.  FRICTION  ESION  FRICTION  ESION   ELEV.  SLOPE  ACT. PASS.
 (PCF)   (PCF)    (DEG)   (PSF)    (DEG)   (PSF)   (FT)  (FT/FT)
 97.00   97.00    25.00    0.00     0.00    0.00  571.00   0.00   DEF  DEF
124.00  124.00    30.00    0.00     0.00    0.00                   DEF  DEF

         V.B.--LEFTSIDE
             LEVEL 2 FACTOR OF SAFETY FOR ACTIVE PRESSURE  = DEFAULT
             LEVEL 2 FACTOR OF SAFETY FOR PASSIVE PRESSURE = DEFAULT

                ANGLE OF         ANGLE OF                        <-SAFETY->
  SAT.   MOIST  INTERNAL  COH-     WALL    ADH-    <--BOTTOM-->  <-FACTOR->
 WGHT.   WGHT.  FRICTION  ESION  FRICTION  ESION   ELEV.  SLOPE  ACT. PASS.
 (PCF)   (PCF)    (DEG)   (PSF)    (DEG)   (PSF)   (FT)  (FT/FT)
100.00  100.00    29.00    0.00     0.00    0.00                   DEF  DEF

     VI.--WATER DATA
        UNIT WEIGHT         = 62.40 (PCF)
                                  Page 1
```

```
        RIGHTSIDE ELEVATION = 568.20 (FT)
        LEFTSIDE ELEVATION  = 568.20 (FT)
        NO SEEPAGE

    VII.--VERTICAL SURCHARGE LOADS

        VII.A.--VERTICAL LINE LOADS
             NONE

        VII.B.--VERTICAL UNIFORM LOADS
                  LEFTSIDE     RIGHTSIDE
                    (PSF)        (PSF)
                     0.00        150.00

        VII.C.--VERTICAL STRIP LOADS
             NONE

        VII.D.--VERTICAL RAMP LOADS
             NONE

        VII.E.--VERTICAL TRIANGULAR LOADS
             NONE

        VII.F.--VERTICAL VARIABLE LOADS
             NONE

   VIII.--HORIZONTAL LOADS
        NONE
```

```
PROGRAM CWALSHT-DESIGN/ANALYSIS OF ANCHORED OR CANTILEVER SHEET PILE WALLS
                          BY CLASSICAL METHODS
DATE: 18-MARCH-2009                                          TIME: 10:45:44

                          **************************
                          *   SOIL PRESSURES FOR   *
                          * CANTILEVER WALL DESIGN *
                          **************************

    I.--HEADING
     'FRENCHTOWN
     'CANTILEVER
     'EMBEDMENT
     'LONG-TERM SOIL DATA W/FILL BELOW TOP OF SSP AND LOW WATER REV 18MAR09

   II.--SOIL PRESSURES

        RIGHTSIDE SOIL PRESSURES DETERMINED BY FIXED SURFACE WEDGE METHOD.

        LEFTSIDE SOIL PRESSURES DETERMINED BY FIXED SURFACE WEDGE METHOD.

                                  <------NET------>
         NET    <---LEFTSIDE--->     (SOIL + WATER)     <--RIGHTSIDE--->
ELEV.   WATER   PASSIVE   ACTIVE    ACTIVE   PASSIVE    ACTIVE   PASSIVE
(FT)    (PSF)     (PSF)    (PSF)     (PSF)     (PSF)     (PSF)     (PSF)
```

579.0	0.0	0.0	0.0	0.0	0.0	0.0	0.0
578.0	0.0	0.0	0.0	0.0	0.0	0.0	0.0
577.0+	0.0	0.0	0.0	0.0	0.0	0.0	0.0
577.0-	0.0	0.0	0.0	60.9	276.7	60.9	276.7
576.0	0.0	0.0	0.0	100.2	455.6	100.2	455.6
575.0	0.0	0.0	0.0	139.6	634.5	139.6	634.5
574.0	0.0	0.0	0.0	179.0	813.4	179.0	813.4
573.0	0.0	0.0	0.0	219.2	988.8	219.2	988.8
572.0	0.0	0.0	0.0	252.7	1189.3	252.7	1189.3
571.0	0.0	0.0	0.0	271.1	1474.6	271.1	1474.6
570.0	0.0	192.3	33.7	98.0	1812.8	290.3	1846.5
569.4	0.0	312.6	54.8	0.0	2034.6	312.6	2089.4
569.0	0.0	384.9	67.5	-58.9	2168.0	326.0	2235.5
568.2	0.0	524.7	92.1	-167.2	2411.7	357.5	2503.8
568.0	0.0	547.6	96.2	-184.3	2458.7	363.3	2554.8
567.0	0.0	615.1	108.9	-230.7	2658.1	384.4	2767.0
566.0	0.0	678.6	120.9	-273.7	2850.8	404.9	2971.7
565.0	0.0	742.3	132.9	-316.8	2998.5	425.4	3131.5
564.0	0.0	805.9	145.0	-360.0	3093.2	446.0	3238.2
563.0	0.0	869.6	157.1	-403.1	3197.8	466.5	3354.9
562.0	0.0	933.3	169.1	-446.5	3322.5	486.8	3491.6
561.0	0.0	997.0	181.2	-487.9	3445.2	509.1	3626.3
560.0	0.0	1060.7	193.2	-525.2	3567.8	535.5	3761.0
559.0	0.0	1124.4	205.3	-561.8	3690.5	562.6	3895.8
558.0	0.0	1188.1	217.3	-600.0	3813.0	588.1	4030.3
557.0	0.0	1251.8	229.4	-638.4	3934.1	613.3	4163.5
556.0	0.0	1315.5	241.4	-676.9	4053.4	638.6	4294.8
555.0	0.0	1379.2	253.5	-715.3	4171.9	663.9	4425.4
554.0	0.0	1442.9	265.5	-753.8	4290.5	689.1	4556.1
553.0	0.0	1506.6	277.6	-792.5	4409.1	714.1	4686.7
552.0	0.0	1570.2	289.6	-831.3	4527.7	739.0	4817.4
551.0	0.0	1633.9	301.7	-870.1	4646.4	763.8	4948.0
550.0	0.0	1697.6	313.7	-908.9	4765.0	788.7	5078.7
549.0	0.0	1761.3	325.8	-947.7	4883.6	813.6	5209.4
548.0	0.0	1825.0	337.9	-986.6	5002.2	838.4	5340.0
547.0	0.0	1888.7	349.9	-1025.2	5120.8	863.5	5470.7
546.0	0.0	1952.4	362.0	-1065.5	5239.4	886.9	5601.4
545.0	0.0	2016.1	374.0	-1109.6	5358.0	906.5	5732.0
544.0	0.0	2079.8	386.1	-1155.1	5476.6	924.7	5862.7
543.0	0.0	2143.4	398.1	-1199.1	5595.2	944.3	5993.4
542.0	0.0	2207.4	410.2	-1242.8	5713.8	964.6	6124.0
541.0	0.0	2275.4	422.2	-1290.7	5832.4	984.7	6254.7
540.0	0.0	2350.1	434.3	-1345.3	5951.1	1004.8	6385.3

PROGRAM CWALSHT-DESIGN/ANALYSIS OF ANCHORED OR CANTILEVER SHEET PILE WALLS
BY CLASSICAL METHODS

DATE: 18-MARCH-2009 TIME: 10:45:44

```
****************************
*  SUMMARY OF RESULTS FOR  *
*  CANTILEVER WALL DESIGN  *
****************************
```

I.--HEADING

Page 3

```
  'FRENCHTOWN
  'CANTILEVER
  'EMBEDMENT
  'LONG-TERM SOIL DATA W/FILL BELOW TOP OF SSP AND LOW WATER REV 18MAR09

II.--SUMMARY

     RIGHTSIDE SOIL PRESSURES DETERMINED BY FIXED SURFACE WEDGE METHOD.

     LEFTSIDE SOIL PRESSURES DETERMINED BY FIXED SURFACE WEDGE METHOD.

WALL BOTTOM ELEV. (FT)     :      557.15
      PENETRATION (FT)     :       13.85

MAX. BEND. MOMENT (LB-FT)  :  8.7307E+03
      AT ELEVATION (FT)    :      563.88

MAX. SCALED DEFL. (LB-IN^3):  2.1248E+09
      AT ELEVATION (FT)    :      579.00

          NOTE:  DIVIDE SCALED DEFLECTION MODULUS OF
                 ELLASTICITY IN PSI TIMES PILE MOMENT
                 OF INERTIA IN IN^4 TO OBTAIN DEFLECTION
                 IN INCHES.
```

PROGRAM CWALSHT-DESIGN/ANALYSIS OF ANCHOREDOR CANTILEVER SHEET PILE WALLS
BY CLASSICAL METHODS

DATE: 18-MARCH-2009 TIME: 10:45:44

```
*****************************
* COMPLETE OF RESULTS FOR   *
*  CANTILEVER WALL DESIGN   *
*****************************

 I.--HEADING
 'FRENCHTOWN
 'CANTILEVER
 'EMBEDMENT
 'LONG-TERM SOIL DATA W/FILL BELOW TOP OF SSP AND LOW WATER REV 18MAR09
```

II.--RESULTS

ELEVATION (FT)	BENDING MOMENT (LB-FT)	SHEAR (LB)	SCALED DEFLECTION (LB-IN^3)	NET PRESSURE (PSF)
579.00	0.0000E+00	0.	2.1248E+09	0.00
578.00	6.9849E-10	0.	1.9751E+09	0.00
577.00+	-6.9849E-10	0.	1.8253E+09	0.00
577.00-	-6.4713E-10	0.	1.8253E+09	60.88
576.00	3.7001E+01	81.	1.6756E+09	100.25
575.00	1.7425E+02	200.	1.5259E+09	139.62
574.00	4.5111E+02	360.	1.3766E+09	178.98
573.00	9.0710E+02	559.	1.2281E+09	219.17
572.00	1.5811E+03	795.	1.0811E+09	252.74
571.00	2.5054E+03	1057.	9.3697E+08	271.05
570.00	3.6688E+03	1241.	7.9718E+08	97.97
569.38	4.4567E+03	1272.	7.1296E+08	0.00
569.00	4.9329E+03	1261.	6.6373E+08	-58.90
568.20	5.9111E+03	1170.	5.6300E+08	-167.19

568.00	6.1417E+03	1135.	5.3880E+08	-184.32
567.00	7.1770E+03	928.	4.2446E+08	-230.70
566.00	7.9822E+03	676.	3.2249E+08	-273.66
565.00	8.5137E+03	380.	2.3427E+08	-316.82
564.00	8.7283E+03	42.	1.6072E+08	-359.97
563.00	8.5830E+03	-340.	1.0220E+08	-403.13
562.00	8.0345E+03	-765.	5.8446E+07	-446.54
561.00	7.0398E+03	-1232.	2.8517E+07	-487.90
560.00	5.5579E+03	-1738.	1.0682E+07	-525.17
559.00	3.5510E+03	-2282.	2.3761E+06	-561.80
558.64	2.6840E+03	-2489.	1.0693E+06	-575.67
558.00	1.1131E+03	-2244.	1.2950E+05	1343.32
557.15	0.0000E+00	0.	0.0000E+00	3916.36

NOTE: DIVIDE SCALED DEFLECTION MODULUS OF ELLASTICITY IN PSI TIMES PILE MOMENT OF INERTIA IN IN^4 TO OBTAIN DEFLECTION IN INCHES.

III.--WATER AND SOIL PRESSURES

		<----------SOIL PRESSURES---------->			
	WATER	<----LEFTSIDE----->		<---RIGHTSIDE---->	
ELEVATION (FT)	PRESSURE (PSF)	PASSIVE (PSF)	ACTIVE (PSF)	ACTIVE (PSF)	PASSIVE (PSF)
579.00	0.	0.	0.	0.	0.
578.00	0.	0.	0.	0.	0.
577.00+	0.	0.	0.	0.	0.
577.00-	0.	0.	0.	61.	277.
576.00	0.	0.	0.	100.	456.
575.00	0.	0.	0.	140.	634.
574.00	0.	0.	0.	179.	813.
573.00	0.	0.	0.	219.	989.
572.00	0.	0.	0.	253.	1189.
571.00	0.	0.	0.	271.	1475.
570.00	0.	192.	34.	290.	1846.
569.38	0.	313.	55.	313.	2089.
569.00	0.	385.	67.	326.	2235.
568.20	0.	525.	92.	358.	2504.
568.00	0.	548.	96.	363.	2555.
567.00	0.	615.	109.	384.	2767.
566.00	0.	679.	121.	405.	2972.
565.00	0.	742.	133.	425.	3131.
564.00	0.	806.	145.	446.	3238.
563.00	0.	870.	157.	467.	3355.
562.00	0.	933.	169.	487.	3492.
561.00	0.	997.	181.	509.	3626.
560.00	0.	1061.	193.	536.	3761.
559.00	0.	1124.	205.	563.	3896.
558.64	0.	1148.	210.	572.	3945.
558.00	0.	1188.	217.	588.	4030.
557.15	0.	1252.	229.	613.	4163.
556.00	0.	1315.	241.	639.	4295.

```
PROGRAM CWALSHT-DESIGN/ANALYSIS OF ANCHORED OR CANTILEVER SHEET PILE WALLS
                          BY CLASSICAL METHODS
DATE: 18-MARCH-2009                                          TIME: 10:47:28

                          ****************
                          *  INPUT DATA  *
                          ****************

      I.--HEADING
     'FRENCHTOWN
     'CANTILEVER
     'BENDING MOMENT
     'LONG-TERM SOIL DATA W/FILL BELOW TOP OF SSP AND HIGH WATER REV 18MAR09

     II.--CONTROL
        CANTILEVER WALL DESIGN
        FACTOR OF SAFETY FOR ACTIVE PRESSURES  = 1.00
        FACTOR OF SAFETY FOR PASSIVE PRESSURES = 1.00

    III.--WALL DATA
        ELEVATION AT TOP OF WALL    = 579.00 FT.

     IV.--SURFACE POINT DATA

          IV.A.--RIGHTSIDE
             DIST. FROM     ELEVATION
             WALL (FT)         (FT)
                  0.00        577.00
                 10.00        577.00
                 20.00        579.00
                 50.00        579.00

          IV.B.--LEFTSIDE
             DIST. FROM     ELEVATION
             WALL (FT)         (FT)
                  0.00        571.00
                 40.00        569.00

      V.--SOIL LAYER DATA

         V.A.--RIGHTSIDE
             LEVEL 2 FACTOR OF SAFETY FOR ACTIVE PRESSURE  = DEFAULT
             LEVEL 2 FACTOR OF SAFETY FOR PASSIVE PRESSURE = DEFAULT

                ANGLE OF         ANGLE OF                        <-SAFETY->
  SAT.   MOIST  INTERNAL  COH-     WALL    ADH-    <--BOTTOM-->  <-FACTOR->
 WGHT.   WGHT.  FRICTION  ESION  FRICTION  ESION   ELEV.  SLOPE  ACT. PASS.
 (PCF)   (PCF)    (DEG)   (PSF)    (DEG)   (PSF)   (FT)  (FT/FT)
 97.00   97.00    25.00    0.00     0.00    0.00  571.00   0.00   DEF  DEF
124.00  124.00    30.00    0.00     0.00    0.00                   DEF  DEF

         V.B.--LEFTSIDE
             LEVEL 2 FACTOR OF SAFETY FOR ACTIVE PRESSURE  = DEFAULT
             LEVEL 2 FACTOR OF SAFETY FOR PASSIVE PRESSURE = DEFAULT

                ANGLE OF         ANGLE OF                        <-SAFETY->
  SAT.   MOIST  INTERNAL  COH-     WALL    ADH-    <--BOTTOM-->  <-FACTOR->
 WGHT.   WGHT.  FRICTION  ESION  FRICTION  ESION   ELEV.  SLOPE  ACT. PASS.
 (PCF)   (PCF)    (DEG)   (PSF)    (DEG)   (PSF)   (FT)  (FT/FT)
100.00  100.00    29.00    0.00     0.00    0.00                   DEF  DEF

     VI.--WATER DATA
        UNIT WEIGHT         = 62.40 (PCF)
                                  Page 1
```

```
RIGHTSIDE ELEVATION = 577.24 (FT)
LEFTSIDE ELEVATION  = 577.24 (FT)
NO SEEPAGE

 VII.--VERTICAL SURCHARGE LOADS

     VII.A.--VERTICAL LINE LOADS
          NONE

     VII.B.--VERTICAL UNIFORM LOADS
               LEFTSIDE     RIGHTSIDE
                 (PSF)        (PSF)
                  0.00        150.00

     VII.C.--VERTICAL STRIP LOADS
          NONE

     VII.D.--VERTICAL RAMP LOADS
          NONE

     VII.E.--VERTICAL TRIANGULAR LOADS
          NONE

     VII.F.--VERTICAL VARIABLE LOADS
          NONE

VIII.--HORIZONTAL LOADS
     NONE
```

```
PROGRAM CWALSHT-DESIGN/ANALYSIS OF ANCHORED OR CANTILEVER SHEET PILE WALLS
                         BY CLASSICAL METHODS
DATE: 18-MARCH-2009                                          TIME: 10:47:29

                         **************************
                         *   SOIL PRESSURES FOR   *
                         * CANTILEVER WALL DESIGN *
                         **************************

 I.--HEADING
  'FRENCHTOWN
  'CANTILEVER
  'BENDING MOMENT
  'LONG-TERM SOIL DATA W/FILL BELOW TOP OF SSP AND HIGH WATER REV 18MAR09

II.--SOIL PRESSURES

     RIGHTSIDE SOIL PRESSURES DETERMINED BY FIXED SURFACE WEDGE METHOD.

     LEFTSIDE SOIL PRESSURES DETERMINED BY FIXED SURFACE WEDGE METHOD.

                                 <------NET------>
      NET    <---LEFTSIDE--->     (SOIL + WATER)     <--RIGHTSIDE--->
ELEV.  WATER   PASSIVE   ACTIVE    ACTIVE   PASSIVE    ACTIVE   PASSIVE
(FT)   (PSF)     (PSF)    (PSF)     (PSF)     (PSF)     (PSF)     (PSF)
                                   Page 2
```

579.0	0.0	0.0	0.0	0.0	0.0	0.0	0.0
578.0	0.0	0.0	0.0	0.0	0.0	0.0	0.0
577.2	0.0	0.0	0.0	0.0	0.0	0.0	0.0
577.0+	0.0	0.0	0.0	0.0	0.0	0.0	0.0
577.0-	0.0	0.0	0.0	60.9	369.6	60.9	369.6
576.0	0.0	0.0	0.0	74.9	454.8	74.9	454.8
575.0	0.0	0.0	0.0	89.0	540.1	89.0	540.1
574.0	0.0	0.0	0.0	103.0	625.3	103.0	625.3
573.0	0.0	0.0	0.0	117.4	706.2	117.4	706.2
572.0	0.0	0.0	0.0	128.7	814.2	128.7	814.2
571.0	0.0	0.0	0.0	133.8	1068.3	133.8	1068.3
570.0	0.0	99.9	12.7	42.3	1445.1	142.2	1457.8
569.5	0.0	151.3	19.2	0.0	1623.3	151.3	1642.5
569.0	0.0	199.8	25.3	-39.9	1791.6	159.8	1817.0
568.0	0.0	299.7	38.0	-118.9	2088.3	180.8	2126.3
567.0	0.0	399.5	50.7	-198.2	2315.1	201.3	2365.8
566.0	0.0	499.4	63.4	-277.6	2446.3	221.9	2509.7
565.0	0.0	599.3	76.0	-356.9	2590.8	242.4	2666.8
564.0	0.0	699.2	88.7	-436.3	2772.2	262.9	2860.9
563.0	0.0	799.1	101.4	-515.6	2953.3	283.5	3054.7
562.0	0.0	899.0	114.1	-595.2	3134.9	303.8	3249.0
561.0	0.0	998.9	126.7	-672.9	3316.7	326.0	3443.4
560.0	0.0	1098.8	139.4	-747.6	3497.5	351.1	3636.9
559.0	0.0	1198.6	152.1	-822.7	3674.6	375.9	3826.6
558.0	0.0	1298.5	164.7	-898.7	3847.7	399.8	4012.4
557.0	0.0	1398.4	177.4	-973.7	4019.7	424.7	4197.1
556.0	0.0	1498.3	190.1	-1048.3	4191.8	450.0	4381.9
555.0	0.0	1598.2	202.8	-1122.9	4363.9	475.3	4566.7
554.0	0.0	1698.1	215.4	-1197.5	4536.0	500.5	4751.5
553.0	0.0	1798.0	228.1	-1272.2	4708.2	525.7	4936.3
552.0	0.0	1897.8	240.8	-1347.0	4880.3	550.8	5121.1
551.0	0.0	1997.7	253.5	-1421.9	5052.4	575.8	5305.9
550.0	0.0	2097.6	266.1	-1496.9	5224.5	600.7	5490.7
549.0	0.0	2197.5	278.8	-1572.0	5396.7	625.5	5675.5
548.0	0.0	2297.4	291.5	-1647.0	5568.8	650.4	5860.3
547.0	0.0	2397.2	304.2	-1721.7	5740.9	675.5	6045.1
546.0	0.0	2497.7	316.8	-1798.8	5913.0	698.9	6229.9
545.0	0.0	2601.6	329.5	-1883.1	6085.2	718.4	6414.7
544.0	0.0	2709.0	342.2	-1972.3	6257.3	736.7	6599.5
543.0	0.0	2817.5	354.8	-2061.2	6429.4	756.3	6784.3
542.0	0.0	2925.9	367.5	-2149.3	6601.6	776.5	6969.1
541.0	0.0	3034.2	380.2	-2237.6	6773.7	796.7	7153.9
540.0	0.0	3142.6	392.9	-2325.8	6945.8	816.8	7338.7

PROGRAM CWALSHT-DESIGN/ANALYSIS OF ANCHORED OR CANTILEVER SHEET PILE WALLS
BY CLASSICAL METHODS

DATE: 18-MARCH-2009 TIME: 10:47:30

```
****************************
*  SUMMARY OF RESULTS FOR  *
*  CANTILEVER WALL DESIGN  *
****************************
```

I.--HEADING

Page 3

```
  'FRENCHTOWN
  'CANTILEVER
  'BENDING MOMENT
  'LONG-TERM SOIL DATA W/FILL BELOW TOP OF SSP AND HIGH WATER REV 18MAR09

II.--SUMMARY

     RIGHTSIDE SOIL PRESSURES DETERMINED BY FIXED SURFACE WEDGE METHOD.

     LEFTSIDE SOIL PRESSURES DETERMINED BY FIXED SURFACE WEDGE METHOD.

WALL BOTTOM ELEV. (FT)     :      560.32
      PENETRATION (FT)     :       10.68

MAX. BEND. MOMENT (LB-FT)  :  4.6131E+03
      AT ELEVATION (FT)    :      565.27

MAX. SCALED DEFL. (LB-IN^3):  8.0007E+08
      AT ELEVATION (FT)    :      579.00

          NOTE:  DIVIDE SCALED DEFLECTION MODULUS OF
                 ELLASTICITY IN PSI TIMES PILE MOMENT
                 OF INERTIA IN IN^4 TO OBTAIN DEFLECTION
                 IN INCHES.
```

```
PROGRAM CWALSHT-DESIGN/ANALYSIS OF ANCHOREDOR CANTILEVER SHEET PILE WALLS
                         BY CLASSICAL METHODS
DATE: 18-MARCH-2009                                          TIME: 10:47:30

                      ****************************
                      * COMPLETE OF RESULTS FOR  *
                      *  CANTILEVER WALL DESIGN  *
                      ****************************

 I.--HEADING
 'FRENCHTOWN
 'CANTILEVER
 'BENDING MOMENT
 'LONG-TERM SOIL DATA W/FILL BELOW TOP OF SSP AND HIGH WATER REV 18MAR09

II.--RESULTS
```

ELEVATION (FT)	BENDING MOMENT (LB-FT)	SHEAR (LB)	SCALED DEFLECTION (LB-IN^3)	NET PRESSURE (PSF)
579.00	0.0000E+00	0.	8.0007E+08	0.00
578.00	-1.7462E-10	0.	7.3640E+08	0.00
577.24	-1.5898E-09	0.	6.8802E+08	0.00
577.00+	-1.4107E-09	0.	6.7274E+08	0.00
577.00-	1.4022E-10	0.	6.7274E+08	60.88
576.00	3.2780E+01	68.	6.0907E+08	74.92
575.00	1.4048E+02	150.	5.4548E+08	88.96
574.00	3.3715E+02	246.	4.8214E+08	103.01
573.00	6.3688E+02	356.	4.1940E+08	117.43
572.00	1.0535E+03	479.	3.5778E+08	128.66
571.00	1.5978E+03	610.	2.9800E+08	133.84
570.00	2.2598E+03	698.	2.4099E+08	42.28
569.49	2.6227E+03	709.	2.1313E+08	0.00
569.00	2.9656E+03	700.	1.8790E+08	-39.94

568.00	3.6321E+03	620.	1.3992E+08	-118.86
567.00	4.1796E+03	462.	9.8209E+07	-198.21
566.00	4.5289E+03	224.	6.3687E+07	-277.57
565.00	4.6007E+03	-93.	3.6951E+07	-356.92
564.00	4.3155E+03	-490.	1.8114E+07	-436.27
563.00	3.5940E+03	-966.	6.6706E+06	-515.63
562.00	2.3569E+03	-1521.	1.3638E+06	-595.20
561.58	1.6657E+03	-1778.	4.8314E+05	-627.78
561.00	6.3244E+02	-1600.	4.7160E+04	1240.76
560.32	0.0000E+00	0.	0.0000E+00	3440.24

NOTE: DIVIDE SCALED DEFLECTION MODULUS OF ELLASTICITY IN PSI TIMES PILE MOMENT OF INERTIA IN IN^4 TO OBTAIN DEFLECTION IN INCHES.

III.--WATER AND SOIL PRESSURES

		<----------SOIL PRESSURES---------->			
	WATER	<----LEFTSIDE----->		<---RIGHTSIDE---->	
ELEVATION (FT)	PRESSURE (PSF)	PASSIVE (PSF)	ACTIVE (PSF)	ACTIVE (PSF)	PASSIVE (PSF)
579.00	0.	0.	0.	0.	0.
578.00	0.	0.	0.	0.	0.
577.24	0.	0.	0.	0.	0.
577.00+	0.	0.	0.	0.	0.
577.00-	0.	0.	0.	61.	370.
576.00	0.	0.	0.	75.	455.
575.00	0.	0.	0.	89.	540.
574.00	0.	0.	0.	103.	625.
573.00	0.	0.	0.	117.	706.
572.00	0.	0.	0.	129.	814.
571.00	0.	0.	0.	134.	1068.
570.00	0.	100.	13.	142.	1458.
569.49	0.	151.	19.	151.	1643.
569.00	0.	200.	25.	160.	1817.
568.00	0.	300.	38.	181.	2126.
567.00	0.	400.	51.	201.	2366.
566.00	0.	499.	63.	222.	2510.
565.00	0.	599.	76.	242.	2667.
564.00	0.	699.	89.	263.	2861.
563.00	0.	799.	101.	283.	3055.
562.00	0.	899.	114.	304.	3249.
561.58	0.	941.	119.	313.	3331.
561.00	0.	999.	127.	326.	3443.
560.32	0.	1099.	139.	351.	3637.
559.00	0.	1199.	152.	376.	3827.

```
PROGRAM CWALSHT-DESIGN/ANALYSIS OF ANCHORED OR CANTILEVER SHEET PILE WALLS
                          BY CLASSICAL METHODS
DATE: 18-MARCH-2009                                          TIME: 10:47:57

                          ****************
                          *  INPUT DATA  *
                          ****************

      I.--HEADING
     'FRENCHTOWN
     'CANTILEVER
     'BENDING MOMENT
     'LONG-TERM SOIL DATA W/FILL BELOW TOP OF SSP AND LOW WATER REV 18MAR09

     II.--CONTROL
        CANTILEVER WALL DESIGN
        FACTOR OF SAFETY FOR ACTIVE PRESSURES  = 1.00
        FACTOR OF SAFETY FOR PASSIVE PRESSURES = 1.00

    III.--WALL DATA
        ELEVATION AT TOP OF WALL    = 579.00 FT.

     IV.--SURFACE POINT DATA

          IV.A.--RIGHTSIDE
             DIST. FROM     ELEVATION
             WALL (FT)         (FT)
                  0.00        577.00
                 10.00        577.00
                 20.00        579.00
                 50.00        579.00

          IV.B.--LEFTSIDE
             DIST. FROM     ELEVATION
             WALL (FT)         (FT)
                  0.00        571.00
                 40.00        569.00

      V.--SOIL LAYER DATA

         V.A.--RIGHTSIDE
             LEVEL 2 FACTOR OF SAFETY FOR ACTIVE PRESSURE  = DEFAULT
             LEVEL 2 FACTOR OF SAFETY FOR PASSIVE PRESSURE = DEFAULT

                ANGLE OF         ANGLE OF                        <-SAFETY->
  SAT.   MOIST  INTERNAL  COH-     WALL    ADH-    <--BOTTOM-->  <-FACTOR->
 WGHT.   WGHT.  FRICTION  ESION  FRICTION  ESION   ELEV.  SLOPE  ACT. PASS.
 (PCF)   (PCF)    (DEG)   (PSF)    (DEG)   (PSF)   (FT)  (FT/FT)
 97.00   97.00    25.00    0.00     0.00    0.00  571.00   0.00   DEF  DEF
124.00  124.00    30.00    0.00     0.00    0.00                   DEF  DEF

         V.B.--LEFTSIDE
             LEVEL 2 FACTOR OF SAFETY FOR ACTIVE PRESSURE  = DEFAULT
             LEVEL 2 FACTOR OF SAFETY FOR PASSIVE PRESSURE = DEFAULT

                ANGLE OF         ANGLE OF                        <-SAFETY->
  SAT.   MOIST  INTERNAL  COH-     WALL    ADH-    <--BOTTOM-->  <-FACTOR->
 WGHT.   WGHT.  FRICTION  ESION  FRICTION  ESION   ELEV.  SLOPE  ACT. PASS.
 (PCF)   (PCF)    (DEG)   (PSF)    (DEG)   (PSF)   (FT)  (FT/FT)
100.00  100.00    29.00    0.00     0.00    0.00                   DEF  DEF

     VI.--WATER DATA
        UNIT WEIGHT         = 62.40 (PCF)
                                  Page 1
```

```
        RIGHTSIDE ELEVATION = 568.20 (FT)
        LEFTSIDE ELEVATION  = 568.20 (FT)
        NO SEEPAGE

    VII.--VERTICAL SURCHARGE LOADS

        VII.A.--VERTICAL LINE LOADS
             NONE

        VII.B.--VERTICAL UNIFORM LOADS
                  LEFTSIDE     RIGHTSIDE
                    (PSF)        (PSF)
                     0.00        150.00

        VII.C.--VERTICAL STRIP LOADS
             NONE

        VII.D.--VERTICAL RAMP LOADS
             NONE

        VII.E.--VERTICAL TRIANGULAR LOADS
             NONE

        VII.F.--VERTICAL VARIABLE LOADS
             NONE

   VIII.--HORIZONTAL LOADS
        NONE
```

```
PROGRAM CWALSHT-DESIGN/ANALYSIS OF ANCHORED OR CANTILEVER SHEET PILE WALLS
                          BY CLASSICAL METHODS
DATE: 18-MARCH-2009                                          TIME: 10:48:00

                          **************************
                          *   SOIL PRESSURES FOR   *
                          * CANTILEVER WALL DESIGN *
                          **************************

    I.--HEADING
     'FRENCHTOWN
     'CANTILEVER
     'BENDING MOMENT
     'LONG-TERM SOIL DATA W/FILL BELOW TOP OF SSP AND LOW WATER REV 18MAR09

   II.--SOIL PRESSURES

        RIGHTSIDE SOIL PRESSURES DETERMINED BY FIXED SURFACE WEDGE METHOD.

        LEFTSIDE SOIL PRESSURES DETERMINED BY FIXED SURFACE WEDGE METHOD.

                                  <------NET------>
         NET    <---LEFTSIDE--->     (SOIL + WATER)     <--RIGHTSIDE--->
ELEV.   WATER   PASSIVE   ACTIVE    ACTIVE   PASSIVE    ACTIVE   PASSIVE
(FT)    (PSF)     (PSF)    (PSF)     (PSF)     (PSF)     (PSF)     (PSF)
```

579.0	0.0	0.0	0.0	0.0	0.0	0.0	0.0
578.0	0.0	0.0	0.0	0.0	0.0	0.0	0.0
577.0+	0.0	0.0	0.0	0.0	0.0	0.0	0.0
577.0-	0.0	0.0	0.0	60.9	369.6	60.9	369.6
576.0	0.0	0.0	0.0	100.2	608.6	100.2	608.6
575.0	0.0	0.0	0.0	139.6	847.6	139.6	847.6
574.0	0.0	0.0	0.0	179.0	1086.6	179.0	1086.6
573.0	0.0	0.0	0.0	219.2	1317.9	219.2	1317.9
572.0	0.0	0.0	0.0	252.7	1600.9	252.7	1600.9
571.0	0.0	0.0	0.0	271.1	2108.3	271.1	2108.3
570.0	0.0	265.7	33.7	24.6	2745.5	290.3	2779.2
569.9	0.0	294.1	37.3	0.0	2803.6	294.1	2840.9
569.0	0.0	531.7	67.5	-205.7	3289.2	326.0	3356.6
568.2	0.0	724.6	92.1	-367.1	3642.8	357.5	3734.9
568.0	0.0	756.0	96.2	-392.7	3716.7	363.3	3812.8
567.0	0.0	847.1	108.9	-462.7	3946.2	384.4	4055.1
566.0	0.0	932.6	120.9	-527.7	4076.8	404.9	4197.7
565.0	0.0	1018.4	132.9	-593.0	4223.8	425.4	4356.7
564.0	0.0	1104.3	145.0	-658.3	4407.7	446.0	4552.7
563.0	0.0	1190.1	157.1	-723.6	4590.0	466.5	4747.0
562.0	0.0	1275.9	169.1	-789.1	4772.2	486.8	4941.3
561.0	0.0	1361.7	181.2	-852.6	4954.5	509.1	5135.7
560.0	0.0	1447.5	193.2	-912.0	5135.9	535.5	5329.1
559.0	0.0	1533.3	205.3	-970.7	5313.7	562.6	5518.9
558.0	0.0	1619.2	217.3	-1031.0	5487.4	588.1	5704.7
557.0	0.0	1705.0	229.4	-1091.6	5660.0	613.3	5889.4
556.0	0.0	1790.8	241.4	-1152.2	5832.7	638.6	6074.2
555.0	0.0	1876.6	253.5	-1212.7	6005.5	663.9	6259.0
554.0	0.0	1962.4	265.5	-1273.4	6178.2	689.1	6443.8
553.0	0.0	2048.2	277.6	-1334.2	6351.0	714.1	6628.6
552.0	0.0	2134.1	289.6	-1395.1	6523.7	739.0	6813.4
551.0	0.0	2219.9	301.7	-1456.0	6696.5	763.8	6998.2
550.0	0.0	2305.7	313.7	-1517.0	6869.2	788.7	7183.0
549.0	0.0	2391.5	325.8	-1577.9	7042.0	813.6	7367.8
548.0	0.0	2477.3	337.9	-1638.9	7214.7	838.4	7552.6
547.0	0.0	2562.8	349.9	-1699.3	7387.5	863.5	7737.4
546.0	0.0	2650.4	362.0	-1763.5	7560.2	886.9	7922.2
545.0	0.0	2746.7	374.0	-1840.3	7732.9	906.5	8107.0
544.0	0.0	2852.6	386.1	-1927.9	7905.7	924.7	8291.8
543.0	0.0	2961.4	398.1	-2017.0	8078.4	944.3	8476.6
542.0	0.0	3069.7	410.2	-2105.2	8251.2	964.6	8661.4
541.0	0.0	3178.1	422.2	-2193.4	8423.9	984.7	8846.2
540.0	0.0	3286.5	434.3	-2281.6	8596.7	1004.8	9031.0

PROGRAM CWALSHT-DESIGN/ANALYSIS OF ANCHORED OR CANTILEVER SHEET PILE WALLS
BY CLASSICAL METHODS

DATE: 18-MARCH-2009 TIME: 10:48:01

```
****************************
*  SUMMARY OF RESULTS FOR  *
*  CANTILEVER WALL DESIGN  *
****************************
```

I.--HEADING

Page 3

```
  'FRENCHTOWN
  'CANTILEVER
  'BENDING MOMENT
  'LONG-TERM SOIL DATA W/FILL BELOW TOP OF SSP AND LOW WATER REV 18MAR09

II.--SUMMARY

     RIGHTSIDE SOIL PRESSURES DETERMINED BY FIXED SURFACE WEDGE METHOD.

     LEFTSIDE SOIL PRESSURES DETERMINED BY FIXED SURFACE WEDGE METHOD.

WALL BOTTOM ELEV. (FT)     :      561.18
      PENETRATION (FT)     :        9.82

MAX. BEND. MOMENT (LB-FT)  :  6.5649E+03
      AT ELEVATION (FT)    :      566.22

MAX. SCALED DEFL. (LB-IN^3):  1.0157E+09
      AT ELEVATION (FT)    :      579.00

          NOTE:  DIVIDE SCALED DEFLECTION MODULUS OF
                 ELLASTICITY IN PSI TIMES PILE MOMENT
                 OF INERTIA IN IN^4 TO OBTAIN DEFLECTION
                 IN INCHES.
```

```
PROGRAM CWALSHT-DESIGN/ANALYSIS OF ANCHOREDOR CANTILEVER SHEET PILE WALLS
                        BY CLASSICAL METHODS
DATE: 18-MARCH-2009                                          TIME: 10:48:01

                      ****************************
                      * COMPLETE OF RESULTS FOR  *
                      *  CANTILEVER WALL DESIGN  *
                      ****************************

  I.--HEADING
  'FRENCHTOWN
  'CANTILEVER
  'BENDING MOMENT
  'LONG-TERM SOIL DATA W/FILL BELOW TOP OF SSP AND LOW WATER REV 18MAR09

 II.--RESULTS
```

ELEVATION (FT)	BENDING MOMENT (LB-FT)	SHEAR (LB)	SCALED DEFLECTION (LB-IN^3)	NET PRESSURE (PSF)
579.00	0.0000E+00	0.	1.0157E+09	0.00
578.00	8.7311E-11	0.	9.3099E+08	0.00
577.00+	8.7311E-11	0.	8.4633E+08	0.00
577.00-	-3.5953E-11	0.	8.4633E+08	60.88
576.00	3.7001E+01	81.	7.6166E+08	100.25
575.00	1.7425E+02	200.	6.7707E+08	139.62
574.00	4.5111E+02	360.	5.9281E+08	178.98
573.00	9.0710E+02	559.	5.0935E+08	219.17
572.00	1.5811E+03	795.	4.2749E+08	252.74
571.00	2.5054E+03	1057.	3.4840E+08	271.05
570.00	3.6566E+03	1205.	2.7367E+08	24.60
569.89	3.7853E+03	1206.	2.6602E+08	0.00
569.00	4.8350E+03	1114.	2.0526E+08	-205.72
568.20	5.6432E+03	885.	1.5645E+08	-367.11

568.00	5.8127E+03	809.	1.4518E+08	-392.70
567.00	6.4135E+03	381.	9.5092E+07	-462.73
566.00	6.5525E+03	-114.	5.6017E+07	-527.73
565.00	6.1637E+03	-674.	2.8189E+07	-593.01
564.00	5.1818E+03	-1300.	1.0926E+07	-658.29
563.00	3.5417E+03	-1991.	2.5225E+06	-723.57
562.36	2.1271E+03	-2464.	5.3848E+05	-765.23
562.00	1.2172E+03	-2425.	1.3545E+05	982.32
561.18	0.0000E+00	0.	0.0000E+00	4921.94

NOTE: DIVIDE SCALED DEFLECTION MODULUS OF ELLASTICITY IN PSI TIMES PILE MOMENT OF INERTIA IN IN^4 TO OBTAIN DEFLECTION IN INCHES.

III.--WATER AND SOIL PRESSURES

		<----------SOIL PRESSURES---------->			
	WATER	<----LEFTSIDE----->		<---RIGHTSIDE---->	
ELEVATION (FT)	PRESSURE (PSF)	PASSIVE (PSF)	ACTIVE (PSF)	ACTIVE (PSF)	PASSIVE (PSF)
579.00	0.	0.	0.	0.	0.
578.00	0.	0.	0.	0.	0.
577.00+	0.	0.	0.	0.	0.
577.00-	0.	0.	0.	61.	370.
576.00	0.	0.	0.	100.	609.
575.00	0.	0.	0.	140.	848.
574.00	0.	0.	0.	179.	1087.
573.00	0.	0.	0.	219.	1318.
572.00	0.	0.	0.	253.	1601.
571.00	0.	0.	0.	271.	2108.
570.00	0.	266.	34.	290.	2779.
569.89	0.	294.	37.	294.	2841.
569.00	0.	532.	67.	326.	3357.
568.20	0.	725.	92.	358.	3735.
568.00	0.	756.	96.	363.	3813.
567.00	0.	847.	109.	384.	4055.
566.00	0.	933.	121.	405.	4198.
565.00	0.	1018.	133.	425.	4357.
564.00	0.	1104.	145.	446.	4553.
563.00	0.	1190.	157.	467.	4747.
562.36	0.	1245.	165.	479.	4871.
562.00	0.	1276.	169.	487.	4941.
561.18	0.	1362.	181.	509.	5136.
560.00	0.	1448.	193.	536.	5329.

Detroit Beach 205 - Quantities
Alternative 3 - Cantilever SSP Wall

		EL: 576.6 ft	EL: 577.24 ft	EL: 578 ft	EL: 581 ft
Item	**Unit**	**Qty**	**Qty**	**Qty**	**Qty**
Remove #7 gauge SSP wall (cut at surface)	SF	28560	26384	23800	13600
Remove exposed tie rods, struts, stairs & misc steel	Lump Sum	1			
Remove existing 6" flap gates	EA	164			
Remove existing 8" drainage pipes	LF	164			
Clear drive line for new wall placement	CY	400			
Excavation behind wall for drainage pipe placement	CY	1900	1500	1100	100
0.7 to 1.4 ton rip rap stone	Tons	3700	5200	7400	19300
MDOT Class II granular fill for wall backfill	CY	2500	2100	1700	700
Flowable fill	CY	700	900	1100	1800
8" ID steel drainage pipe w/ SS wire mesh	LF	230			
8" duck bills for drain pipes	EA	115			
PZ-22 SSP	SF	64600	66780	69360	79560
C12 x 25 channel cap	LF	3400			

Detroit Beach 205 - Quantities
Alternative 5 - Concrete Panel/H-Pile Wall

selected elev.

Item	Unit	EL: 576.6 ft Qty	EL: 577.24 ft Qty	EL: 578 ft Qty	EL: 579 ft Qty	EL: 580 ft Qty	EL: 581 ft Qty
Remove #7 gauge SSP wall (cut at surface)	SF	28560	26384	23800	20400	17000	13600
Remove exposed tie rods, struts, stairs & misc steel	Lump Sum	1					
Remove existing 6" flap gates	EA	164					
Remove existing 8" drainage pipes	LF	164					
Clear drive line for new wall placement	CY	400					
Excavation behind wall for drainage pipe placement	CY	1900	1500	1100	600	300	100
0.7 to 1.4 ton rip rap stone	Tons	3700	5200	7400	11000	14700	19300
MDOT Class II granular fill for wall backfill	CY	2500	2100	1700	1200	900	700
Flowable fill	CY	700	900	1100	1300	1600	1800
8" ID steel drainage pipe w/ SS wire mesh	LF	230					
8" duck bills for drain pipes	EA	115					
W16 x 67 H-piles	LF	6460	6680	6940	7280	7620	7960
6" thick,10' wide precast reinforced concrete panel	SF	25850	28020	30600	34000	37400	40800
C12 x 25 channel cap	LF	3400					

Detroit Beach 205 - Quantities
Alternative 6 - SSP/H-Pile Wall

		EL: 576.6 ft	EL: 577.24 ft	EL: 578 ft	EL: 581 ft
Item	**Unit**	**Qty**	**Qty**	**Qty**	**Qty**
Remove #7 gauge SSP wall (cut at surface)	SF	28560	26384	23800	13600
Remove exposed tie rods, struts, stairs & misc steel	Lump Sum	1			
Remove existing 6" flap gates	EA	164			
Remove existing 8" drainage pipes	LF	164			
Clear drive line for new wall placement	CY	400			
Excavation behind wall for drainage pipe placement	CY	1900	1500	1100	100
0.7 to 1.4 ton rip rap stone	Tons	3700	5200	7400	19300
MDOT Class II granular fill for wall backfill	CY	2500	2100	1700	700
Flowable fill	CY	700	900	1100	1800
8" ID steel drainage pipe w/ SS wire mesh	LF	230			
8" duck bills for drain pipes	EA	115			
PZ-22 SSP	SF	32650	34820	37400	47600
W14 x 22 H-piles	LF	6460	6680	6940	7960
C12 x 25 channel cap	LF	3400			
W8 x 36 Wale for SSP/H-pile wall	LF	6800			

Detroit Beach 205 - Quantities
Alternative 7 - Concrete Wall

		EL: 576.6 ft	EL: 577.24 ft	EL: 578 ft	EL: 581 ft
Item	**Unit**	**Qty**	**Qty**	**Qty**	**Qty**
Remove #7 gauge SSP wall (complete)	SF	59500			
Remove exposed tie rods, struts, stairs & misc steel	Lump Sum	1			
Remove existing 6" flap gates	EA	164			
Remove existing 8" drainage pipes	LF	164			
Excavation for wall placement	CY	9200			
0.7 to 1.4 ton rip rap stone	Tons	3700	5200	7400	19300
MDOT Class II granular fill for wall backfill	CY	3900	4700	5700	10200
8" ID steel drainage pipe w/ SS wire mesh	LF	230			
8" duck bills for drain pipes	EA	115			
Cast in-place concrete wall	CY	3730	3810	3910	4290
Cast in-place concrete wall	SF	58490	62840	68000	88400
Reinforcing steel for concrete wall (#4 bars, grade 60)	Tons	260	260	270	290

Detroit Beach 205 - Quantities
Alternative 9 - Armored Slope

		EL: 576.6 ft	EL: 577.24 ft	EL: 578 ft	EL: 581 ft
Item	**Unit**	**Qty**	**Qty**	**Qty**	**Qty**
Remove #7 gauge SSP wall (complete)	SF	59500			
Remove exposed tie rods, struts, stairs & misc steel	Lump Sum	1			
Remove existing 6" flap gates	EA	164			
Remove existing 8" drainage pipes	LF	164			
Excavation above water for clay blanket + stone	CY	12000	10600	9000	3800
Excavation below water for rip rap key (water @ 570')	CY	7200	7700	7500	7000
Geotextile	SF	149400	160800	168400	193600
Compacted clay (blanket)	CY	1800	2100	2200	4900
130 to 250 lb bedding stone	Tons	14300	15600	16400	20000
0.7 to 1.4 ton rip rap stone	Tons	20200	23000	23900	32600

COMPUTATION SHEET

PROJECT Detroit Beach Section 205 (Frenchtown) SHEET NO. 1 OF 9 SHEETS

ITEM Engineering Appendix DATE

SUBJECT Quantity Calculations FILE

COMPUTED BY SAW CHECKED BY AAJ REF DRAWING NO.

Alternatives 3, 5 and 6 – Example calc using Top of wall = 578'

Remove existing SSP wall (cut at surface)

Top of existing wall = ~581' Wall length = 3400'

Base for new drainage pipe = Wall top – 4' = 578' – 4' = 574'

∴ cut SSP to pipe base = (581' – 574') × 3400' = 23,800 SF

Clear drive line for new wall placement

Assume 3' wide × 1' deep trench for drive line

$3' \times 1' \times 3400' = 10,200\ ft^3 \cdot \frac{1\ yd^3}{27\ ft^3} = 378\ cy$

→ say 400 cy

Excavate behind existing wall for drainage pipe placement

ave ground surface behind wall = 577.6' say 578'

Assume 1 on 1 slope from pipe base 578' – 574' = 4'

$\frac{1}{2} \times 4' \times 4' \times 3400' = 27,200\ ft^3 \cdot \frac{1\ yd^3}{27\ ft^3} = 1007\ cy$

→ say 1100 cy

0.7 to 1.4 ton Rip rap stone (includes Alt 7)

use new drain pipe base for top of stone elev = 574'

Ave ground surface lakeward of wall is ~570' (also assumes some existing stone can be re-used)

Assume 3' wide bench of stone in front of wall

and 3 on 1 slope from there lakeward.

Length of stone req'd = 3800'

COMPUTATION SHEET

PROJECT Detroit Beach Section 205 (Frenchtown) SHEET NO. 2 OF 9 SHEETS

ITEM Engineering Appendix DATE

SUBJECT Quantity Calculations FILE

COMPUTED BY SAW CHECKED BY AAJ REF DRAWING NO.

Rip rap stone con't

$574' - 570' = 4'$ 3 on 1 slope

$\therefore \left[(4' \times 3') + \left(\frac{1}{2} \times 4' \times (3 \times 4')\right)\right] \times 3800 \text{ ft} = 136800 \text{ cf}$

Assume effective unit weight of stone using density = 165 pcf and 35% voids

$= 165 \text{ pcf} \times (1 - 0.35) = 107.3 \text{ pcf}$

tonnage of stone req'd $= 136800 \text{ cf} \times 107.3 \frac{\text{lb}}{\text{cf}} \times \frac{1 \text{ ton}}{2000 \text{ lb}} = 7339 \text{ tons}$

→ say 7400 tons

Backfill for new wall

Replace excavated fill & fill above pipe base to 2' below wall top

wall top = 578' wedge fill $= ((578' - 2') - 574') \times 2' \times 3400'$

$= 13600 \text{ cf} \times \frac{1 \text{ cy}}{27 \text{ cf}} = 504 \text{ cy}$

→ say 600 cy

(account for air voids)

Total backfill = 1100 cy + 600 cy = 1700 cy

Flowable fill for beneath pipe and btw old wall and new wall

pipe base - ave btm → $574' - 570' = 4'$

2' wide $\therefore 4' \times 2' \times 3400' \times \frac{1 \text{ cy}}{27 \text{ cf}} = 1007 \text{ cy}$

→ say 1100 cy

COMPUTATION SHEET

PROJECT Detroit Beach Section 205 (Frenchtown) SHEET NO. 3 OF 9 SHEETS

ITEM Engineering Appendix DATE

SUBJECT Quantity Calculations FILE

COMPUTED BY SAW CHECKED BY AAT REF DRAWING NO.

New wall drainage system

1 pipe and "duck bill" every 30' O.C

$\frac{3400'}{30'} = 113 \rightarrow$ say 115 $\therefore$ 115 - 8" duck bill check valves req'd

steel pipe is 8" I.D., 2' long w/ wire mesh screen on land side
(sch 40)

pipe length = 2' x 115 = 230 LF

Alt 3 only - req'd SSP est. top of rock = 557.6'

= (top of wall - top of rock) = 578' - 557.6' = 20.4 LF

$\therefore$ 20.4' x 3400' = 69360 SF PZ-22 SSP

C 12 x 25 channel cap for Alts 3, 5 and 6

length of wall = 3400' $\therefore$ 3400 LF of channel cap req'd

Req'd H-pile length for Alts 5 and 6, piles are 10' O.C

$\frac{3400'}{10} = 340$ piles (578' - 557.6') x 340 = 6936 LF

$\rightarrow$ Say 6940 LF

6" thick precast reinforced concrete panel for Alt 3 only

Assume 1' embedment so $\rightarrow$ 570' - 1' = 569'

(578' - 569') x 3400' = 30600 SF

COMPUTATION SHEET

PROJECT Detroit Beach Section 205 (Frenchtown) SHEET NO. 4 OF 9 SHEETS

ITEM Engineering Appendix DATE

SUBJECT Quantity Calculations FILE

COMPUTED BY SAW CHECKED BY AAJ REF DRAWING NO.

Req'd SSP for Alt 6 only, assume 3' req'd embedment

so 570' - 3' = 567'

(578' - 567') x 3400' = 37,400 SF PZ-22 SSP

Req'd W8 x 36 wale for Alt 6 only

Assume 2 sets along length of wall → 2 x 3400' = 6800 LF

Complete removal of existing SSP wall for Alts 7 and 9

Existing wall btm = 563.5'

∴ (581' - 563.5') x 3400' = 59,500 SF

Excavation for concrete wall, Alt 7 only

Assume 8' base and wall base elev of 568', base is 3' high

base excavation = (570' - 568') x 8' x 3400' x $\frac{1}{27}$ = 2015 cy

cut back slope (1 on 1), ground surface ~ 578'

(578' - 568') = 10', fill above base = 578' - (568' + 3) = 7'
(1' slice)

∴ $\left[\left(\frac{1}{2} \times 10' \times 10'\right) + (7' \times 1')\right] \times 3400' \times \frac{1}{27}\frac{cy}{cf}$ = 7178 cy

Total excavation = 2015 cy + 7178 cy = 9193 cy

→ Say 9200 cy

COMPUTATION SHEET

PROJECT Detroit Beach Section 205 (Frenchtown) SHEET NO. 5 OF 9 SHEETS

ITEM Engineering Appendix DATE

SUBJECT Quantity Calculations FILE

COMPUTED BY SAW CHECKED BY AAT REF DRAWING NO.

Backfill for new concrete wall, Alt 7 only

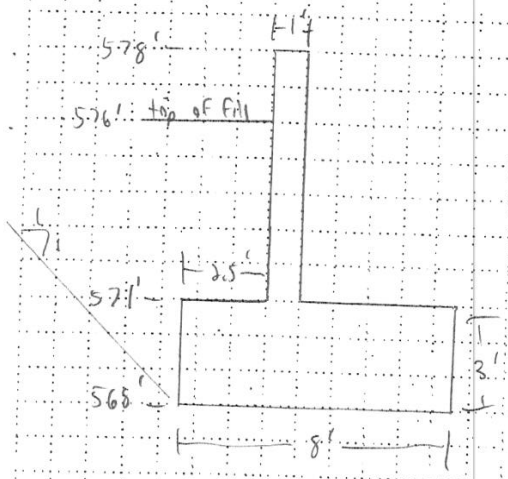

$$\left[\left(\underbrace{(576' - 571')}_{125} \times 2.5'\right) + \left(\underbrace{(576' - 568')}_{32}{}^2 \times \frac{1}{2}\right)\right] \times 3400' \times \frac{1\ cy}{27\ cf} = 5603\ cy$$

→ say 5700 cy

Cast in-place concrete, Alt 7 only

doubled for formwork $= 2 \times [(3' + 7') \times 3400'] = 68000$ SF

volume req'd $= [(3' \times 8' \times 3400') + (1' \times (578' - 571') \times 3400')] \times 1/27$

$= 3904$ cy → say 3910 cy

Reinforcing steel for concrete wall, #4 bars, grade 60

Assume 5 lbs of steel per cubic foot of concrete

So $3910\ cy \times 27\ \frac{cf}{cy} = 105570\ cf \times 5\ \frac{lbs}{cf} \times \frac{1\ ton}{2000\ lbs} = 264$ tons

→ say 270 tons

COMPUTATION SHEET

PROJECT Detroit Beach Section 205 (Frenchtown) SHEET NO. 6 OF 9 SHEETS

ITEM Engineering Appendix DATE

SUBJECT Quantity Calculations FILE

COMPUTED BY SAW CHECKED BY AAT REF DRAWING NO.

Alternative 9

① = 576.6 ft ② = 577.24 ft

Excavation above water

③ = 578 ft ④ 581 ft

① $\left(\left(578' - \underset{95.6}{568.2'}\right) \times 19.5' \times \frac{1}{2}\right) \times 3400.0' \times \frac{1}{27}\frac{cy}{cf} = 12032\ cy \rightarrow$ Say 12000 cy

② $\left(\left(578' - \underset{84.2}{568.9'}\right) \times 18.5' \times \frac{1}{2}\right) \times 3400' \times \frac{1}{27}\frac{cy}{cf} = 10600\ cy$

③ $\left(\left(578' - \underset{71.4}{569.6'}\right) \times 12' \times \frac{1}{2}\right) \times 3400' \times \frac{1}{27}\frac{cy}{cf} = 8991\ cy \rightarrow$ Say 9000 cy

④ $\left(\left(578' - \underset{29.7}{577.6'}\right) \times 11' \times \frac{1}{2}\right) \times 3400' \times \frac{1}{27}\frac{cy}{cf} = 3740\ cy \rightarrow$ Say 3800 cy

Excavation below water

① $\left(\left(\underset{13.34}{(569.3' - 566.25')} \times 8.75' \times \frac{1}{2}\right) + \left(\underset{35.75}{(569' - 566.25')} \times 13'\right) + \left(\frac{1}{2} \times 2' \times 2'\right)\right)$
$\times 3800' \times \frac{1}{27}\frac{cy}{cf} = 7190\ cy \rightarrow$ Say 7200 cy

② $\left(\left(\underset{15}{(569' - 566')} \times 10' \times \frac{1}{2}\right) + \left(\underset{37.5}{(569' - 566')} \times 12.5'\right) + \left(\frac{1}{2} \times 2' \times 2'\right)\right)$
$\times 3800' \times \frac{1}{27}\frac{cy}{cf} = 7670\ cy \rightarrow$ Say 7700 cy

③ $\left(\left(\underset{13.5}{(569' - 566')} \times 9' \times \frac{1}{2}\right) + \left(\underset{37.5}{(569' - 566')} \times 12.5'\right) + \left(\frac{1}{2} \times 2' \times 2'\right)\right)$
$\times 3800' \times \frac{1}{27}\frac{cy}{cf} = 7459\ cy \rightarrow$ Say 7500 cy

④ $\left(\left(\underset{10.8}{(568.5' - 565.8')} \times 8' \times \frac{1}{2}\right) + \left(\underset{36.72}{(568.5' - 565.8' \times 13.6')} + \left(\frac{1}{2} \times 2' \times 2'\right)\right)\right)$
$\times 3800' \times \frac{1}{27}\frac{cy}{cf} = 6969\ cy \rightarrow$ Say 7000 cy

COMPUTATION SHEET

PROJECT Detroit Beach Section 205 (Frenchtown) SHEET NO. 7 OF 9 SHEETS

ITEM Engineering Appendix DATE

SUBJECT Quantity Calculations FILE

COMPUTED BY SAW CHECKED BY AAT REF DRAWING NO.

Alt 9

Geotextile

① $(16' \times 3400') + ((9' + 13' + 3') \times 3800')$ = 149,400 SF
(54400; 95000)

② $(16' \times 3400') + ((12.5' + 12.5' + 3') \times 3800')$ = 160,800 SF
(54400; 106400)

③ $(16' \times 3400') + ((14.5' + 12.5' + 3') \times 3800')$ = 168,400 SF
(54400; 114000)

④ $(11' \times 3400') + ((24.5' + 13.6' + 3') \times 3800')$ = 193580 SF → say 193,600 SF
(37400; 156180)

Compacted Clay

thickness = 1'

① $(14' \times 1' \times 3400') \times \frac{1\ cy}{27\ cf}$ = 1763 cy → say 1800 cy

② $(16' \times 1' \times 3400') \times \frac{1\ cy}{27\ cf}$ = 2015 cy → say 2100 cy

③ $(12.5' \times 1' \times 3400') \times \frac{1\ cy}{27\ cf}$ = 2204 cy → say 2200 cy

④ $((12' \times 1' \times 3400') + (\frac{1}{2} \times 4' \times 12' \times 3800')) \times \frac{1\ cy}{27\ cf}$ = 4889 cy
(40800; 91200)

→ say 4900 cy

COMPUTATION SHEET

PROJECT Detroit Beach Section 205 (Frenchtown) SHEET NO. 8 OF 9 SHEETS

ITEM Engineering Appendix DATE

SUBJECT Quantity Calculations FILE

COMPUTED BY SAW CHECKED BY AAJ REF DRAWING NO.

Alt 9

Bedding Stone thickness = 2' Stone unit wt (eff) = 107.3 pcf

① $\left(\underbrace{(13' \times 2' \times 3400')}_{88400} + \underbrace{((9.25' + 14') \times 2' \times 3800')}_{176700}\right)$

$\times 107.3 \frac{lb}{cf} \times \frac{1 \text{ ton}}{2000 \text{ lb}} = 14223 \text{ ton} \rightarrow$ say 14300 tons

② $\left(\underbrace{(13.5' \times 2' \times 3400')}_{91800} + \underbrace{((12.5' + 13.5') \times 2' \times 3800')}_{197600}\right)$

$\times 107.3 \frac{lb}{cf} \times \frac{1 \text{ ton}}{2000 \text{ lb}} = 15526 \text{ ton} \rightarrow$ say 15600 tons

③ $\left(\underbrace{(13.5' \times 2' \times 3400')}_{91800} + \underbrace{((14.5' + 13.5') \times 2' \times 3800')}_{212800}\right)$

$\times 107.3 \frac{lb}{cf} \times \frac{1 \text{ ton}}{2000 \text{ lb}} = 16342 \text{ ton} \rightarrow$ say 16400 tons

④ $\left(\underbrace{(11' \times 2' \times 3400')}_{74800} + \underbrace{((24' + 15') \times 2' \times 3800')}_{296400}\right)$

$\times 107.3 \frac{lb}{cf} \times \frac{1 \text{ ton}}{2000 \text{ lb}} = 19915 \text{ ton} \rightarrow$ say 20000 tons

COMPUTATION SHEET

PROJECT Detroit Beach Section 205 (Frenchtown) SHEET NO. 9 OF 9 SHEETS

ITEM Engineering Appendix DATE

SUBJECT Quantity Calculations FILE

COMPUTED BY SAW CHECKED BY AAT REF DRAWING NO.

Alt 9

Rip Rap Stone thickness = 4.5' stone unit wt (eff.) = 107.3 pcf

① $\left(\left(5' \times 10' \times \frac{1}{2} \times 3400'\right) + \left(21' \times 4.5' \times 3800'\right)\right)$

85000 290700

$\times 107.3 \frac{lb}{cf} \times \frac{1 \text{ ton}}{2000 \text{ lb}} = 20156 \text{ ton} \rightarrow$ say 20200 tons

② $\left(\left(5' \times 10' \times \frac{1}{2} \times 3400'\right) + \left(20' \times 4.5' \times 3800'\right)\right)$

85000 342000

$\times 107.3 \frac{lb}{cf} \times \frac{1 \text{ ton}}{2000 \text{ lb}} = 22909 \text{ ton} \rightarrow$ say 23000 tons

③ $\left(\left(5' \times 10' \times \frac{1}{2} \times 3400'\right) + \left(21' \times 4.5' \times 3800'\right)\right)$

85000 359100

$\times 107.3 \frac{lb}{cf} \times \frac{1 \text{ ton}}{2000 \text{ lb}} = 23826 \text{ ton} \rightarrow$ say 23900 tons

④ $\left(\left(5' \times 9' \times \frac{1}{2} \times 3400'\right) + \left(31' \times 4.5' \times 3800'\right)\right)$

76500 530100

$\times 107.3 \frac{lb}{cf} \times \frac{1 \text{ ton}}{2000 \text{ lb}} = 32544 \text{ ton} \rightarrow$ say 32600 tons

Tideflex Technologies
600 N. Bell Ave., Bldg. 2 • Carnegie, PA 15106
Phone: 412.279.0044
Fax: 412.279.7878

TF-1 Slip-On

***Menu**-Check Valves*

Features

- 100% elastomer construction eliminates maintenance
- Will not warp or freeze open or shut
- Eliminates backflow, seals 100%
- Custom built to customer specifications
- Curved Bill enhances sealing
- Available in diameters from 1/2" to 120"

Materials Of Construction

- Elastomers
  - *Class I - Up to 180° F*
  - *Pure Gum Rubber, Neoprene, Hypalon, Viton®-lined*
  - *Class II - Up to 250° F*
  - *Chlorobutyl, EPDM, Viton®-lined, Teflon®-lined*
  - *Class III - Up to 400° F*
  - *Solid Viton®*
- **Elastomer Information**

View "in use"

Description

The TF-1 is Tideflex Technologies's most commonly used check valve configuration. Designed primarily for end-of-pipe outfall installations, the TF-1 features a flat bottom and flared top. This allows the valve to be installed at a lower overall elevation than other configurations, with less bottom clearance required. this is especially important in low-lying areas where maintaining as much driving head is critical, or where silt , sand and debris might be present beneath the valve.

This design is also ideal for existing manhole installations where the invert of the pipe is close to the floor of the vault. There are many check valves in interceptors, manholes, and vaults. These vaults are designed so that there would be a maximum gravity head; thus, the invert pipe is as close to the base as possible. The TF-1 allows installations in such applications.

The TF-1 installs by slipping over the end of an exposed piece of pipe, and is held in place by stainless steel bands or half-clamp(s). Unlike other valves, the TF-1 is sized to match the OUTSIDE DIAMETER of the pipe, therefore it is important to know what type of pipe the valve will be mated to. A valve sized for steel or PVC pipe will be far too small for concrete pipe. Tideflex Technologies also offers a thimble plate option allowing the slip-on TF-1 to be installed directly to a headwall or seawall. For higher backpressure ratings or to lower headloss while maintaining backpressure ratings, the SST can be used in conjunction with the Series TF-1.

The original Tideflex design, the TF-2, has a flare on the top and bottom of the valve. It has been superseded by the TF-1 as Red Valve's standard design, but remains available for customers who desire it for aesthetic reasons or space limitations. The centered bill design is also standard on all inline valves.

Applications
- *Floatables Control Strategy*

Specifications
- *Series TF-1*

IOM's
- *Series TF-1*

Case Studies
- *Commercial Retention Pond*
- *Improve CSO Infrastructure*
- *Highway Flood Prevention*
- *Tropical Downpour*
- *High Capacity Pump Stations*
- *King Tides*
- *Seattle, WA*

Technical Data
- *Series TF-1*
- *TF-1 Check Valve*
- *Low Headloss*
- *Shortening*

Cut Sheets
- *Series TF-1*

Detroit Beach (Frenchtown) Section 205 - Updated Qty Summary

3-Mar-09 Calculated by: SAW Checked by: AJ

Flanking Dike Repair Qtys (Vegetation)

Assumptions

1) Dike repair consists of clearing brush and removing trees up to 14 inches, removal and replacement of clay, and resodding.
2) Original design was 578 ft (IGLD85). The new required elevation is 579 ft (IGLD85). Average dike height is assumed to be 4 ft. Calcs are provided for 578 ft.
3) The berms along Lake Erie will not be considered for repair/replacement.

4) Quantity for compacted clay required includes a loose material factor of 1.35.

Summary

	UNIT	578 ft QTY	579 ft QTY
Estimated length of repair:	FT	2,800	2,800
Area to clear and grub:	SF	54,000	54,000
Quantity of clay to remove (in place volume):	CY	3,000	3,000
Quantity of clay required (compacted):	CY	1,450	4,360
Area to resod:	SF	47,040	61,880

Flanking Dike Repair Qtys (North Section Concrete Wall)

Summary

	UNIT	578 ft QTY	579 ft QTY
Estimated length of repair:	FT	1,200	1,200
North Flank Area Dike Removal:	CY	2,500	2,500
Wall Foundation Excavation:	CY	1,900	1,900
Wall Backfill:	CY	1,000	1,480
Area to Resod:	SF	13,200	13,200
Concrete:	CY	1,250	1,300
Steel Reinforcement:	TON	85	88
Sand & Gravel for 6" Pipe	CY	250	250
6" PVC Perforated Pipe:	LF	1,200	1,200
SSP Cut-off Wall:	TON	53	53

Flanking Dike Repair Qtys (South Section SSP Wall)

Summary

	UNIT	578 ft QTY	579 ft QTY
Estimated length of repair:	FT	450	450
Cut Existing Wall at Ground Surface:	SF	900	900
Backfill:	CY	350	350
Area to resod:	SF	900	900
PZ 22 SSP Wall:	TON	100	105
Steel Cap:	LF	450	450

PROJECT TITLE: Detroit Beach (Frenchtown) Section 205	COMPUTED BY: SAW	DATE: 3/3/09	SHEET: 1 of 2
SUBJECT: Engineering Appendix Quantity Calculations Vegetation Removal and Dike Repair	CHECKED BY: AJ	DATE: 3/4/09	REFERENCE DWG:

Estimated Length of Repair

South Sta 0+00 to 19+50 = 1950 ft

South Sta 39+89 to 48+00 = 811 ft

2761 ft say 2800 ft

See sketch for details

top of dike is ave. 5' wide / 2 on 1 side slopes

Remove 1.5 ft thick layer due to clearing + grubbing

Replace w/ 0.6 ft thick layer compacted clay to new elev 578'

Area to Clear + Grub

$= (5' + 2(2.1')) \times 2800' = 19.2' \times 2800' = 53760$ SF

→ say 54000 SF

Clay Removal

$A = (5' \times 1.5') + 2(2.1' \times 1.5') = 28.8$ SF

2.5 2.1

$V = 28.8\ ft^2 \times 2800\ ft = 80640\ cf \times \frac{1\ cy}{27\ cf} = 2987\ cy$

→ say 3000 cy

In-place volume

PROJECT TITLE: Detroit Beach (Frenchtown) Section 205	COMPUTED BY: SAW	DATE: 3/3/09	SHEET: 2 of 2
SUBJECT: Engineering Appendix Quantity Calculations Vegetation Removal and Dike Repair	CHECKED BY: AJ	DATE: 3/4/09	REFERENCE DWG:

Clay Replacement

$A = (5' \times 0.6') + 2(5.9' \times 0.6') = 10.08$ SF

3 7.08

$V = 10.08\ ft^2 \times 2800\ ft = 28224\ cf \times \frac{1\ cy}{27\ cf} = 1045\ cy$

$\rightarrow 1045\ cy \times 1.35$ (loss mat'l factor) $= 1410.8\ cy$

$\rightarrow$ say 1450 cy

Area to Re-Sod

$(5' + 2(5.9')) \times 2800' = 16.8' \times 2800' = 33600$ SF

$\rightarrow$ say 34000 SF

Side Slope Surface Length

AJ
3/4/09

1 inch = 1 foot

ck scale

$\sin 63.44° = \frac{1.5}{h}$ $h = 1.68'$ ✓

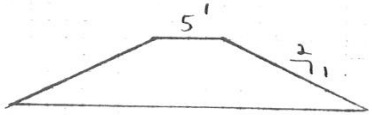

Assumed Typical Section
(NTS)

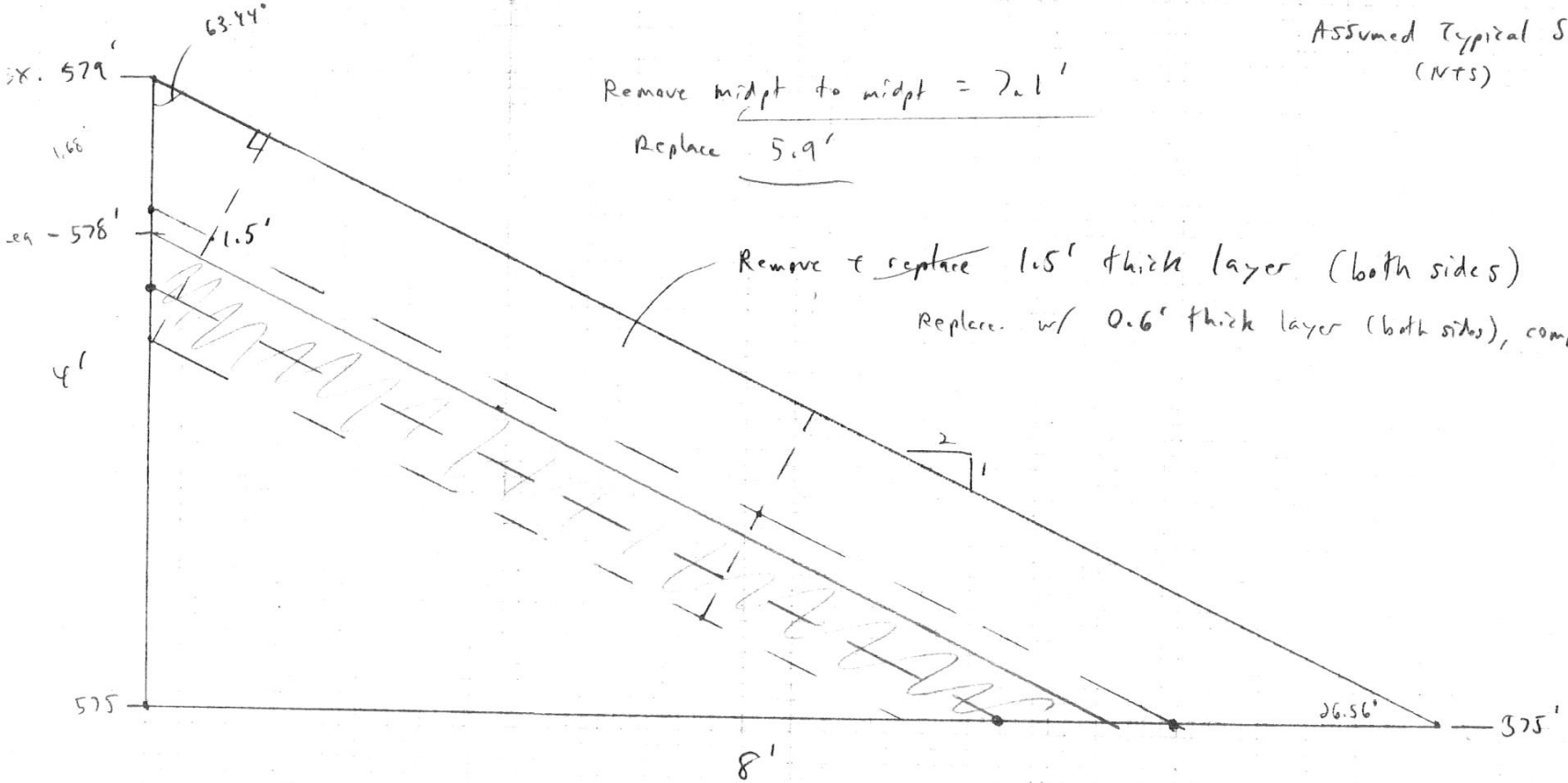

Remove midpt to midpt = 7.1'

Replace 5.9'

Remove & ~~replace~~ 1.5' thick layer (both sides)

Replace w/ 0.6' thick layer (both sides), compacted clay

PROJECT TITLE: Detroit Beach (Frenchtown) Section 205	COMPUTED BY: SAW	DATE: 3/3/09	SHEET: 1 of 2
SUBJECT: Engineering Appendix Quantity Calculations North Flank Concrete Wall	CHECKED BY: AJ	DATE: 3/4/09	REFERENCE DWG:

Length of North Flank to Remove and Replace w/ wall = 1200 LF

See Attached for Typical wall section from EM 1110-2-2502

Dike Removal

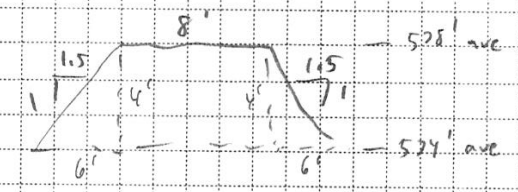

$A = 2\left(\frac{1}{2} \times 4' \times 6'\right) + (8' \times 4')$

24 32

$A = 56$ SF

$V = 56\ ft^2 \times 1200\ ft \times \frac{1\ cy}{27\ cf} = 2489\ cy$

→ say 2500 cy

Edn Excavation for wall Placement + Toe Drain

(from figure) $V = \left[\left((524' - 520') \times 8'\right) + \left(2.5' \times (524' - 520')\right)\right] \times 1200'$

$V = (32\ SF + 10\ SF) \times 1200\ ft \times \frac{1\ cy}{27\ cf} = 1866\ cy$

→ say 1900 cy

Back fill for new wall

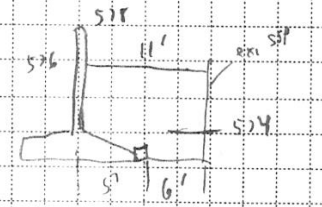

$A = (526' - 524') \times (5' + 6') = 22\ SF$

$V = 22\ SF \times 1200\ ft \times \frac{1\ cy}{27\ cf} = 977\ cy$

→ say 1000 cy

PROJECT TITLE: Detroit Beach (Frenchtown) Section 205	COMPUTED BY: SAW	DATE: 3/3/09	SHEET: 2 of 2
SUBJECT: Engineering Appendix Quantity Calculations North Flank Concrete Wall	CHECKED BY: AJ	DATE: 3/4/09	REFERENCE DWG:

Concrete

$A = ((528' - 524') \times 1') + (8' \times 2') + (\frac{1}{2} \times 2' \times 8')$ = 28 SF
(4, 16, 8)

$V = 28\ SF \times 1200\ ft \times \frac{1\ cy}{27\ cf} = 1244\ cy$

say → 1250 cy

Steel Reinforcement

Assume 5 lb steel per cf of concrete

$= 1250\ cy \times \frac{27\ cf}{1\ cy} \times \frac{5\ lb}{1\ cf} \times \frac{1\ Ton}{2000\ lb} = 84.4$ tons

→ say 85 tons

Toe Drain

Sand / Gravel for 6" pipe

$V = (2.5' \times 2.25') \times 1200\ ft \times \frac{1\ cy}{27\ cf} = 250\ cy$

Length of perforated pipe 6" dia = 1200 ft
(bottom half)

SSP cut-off wall

P222 Top EL = 571' Tip El = 567'

$= (571' - 567') \times 1200\ ft \times \frac{22\ lbs}{1\ SF} \times \frac{1\ Ton}{2000\ lbs} = 52.8$ Tons

→ say 53 Tons

Area to Re-Sod (behind wall only)

$A = 11' \times 1200' = 13{,}200\ SF$

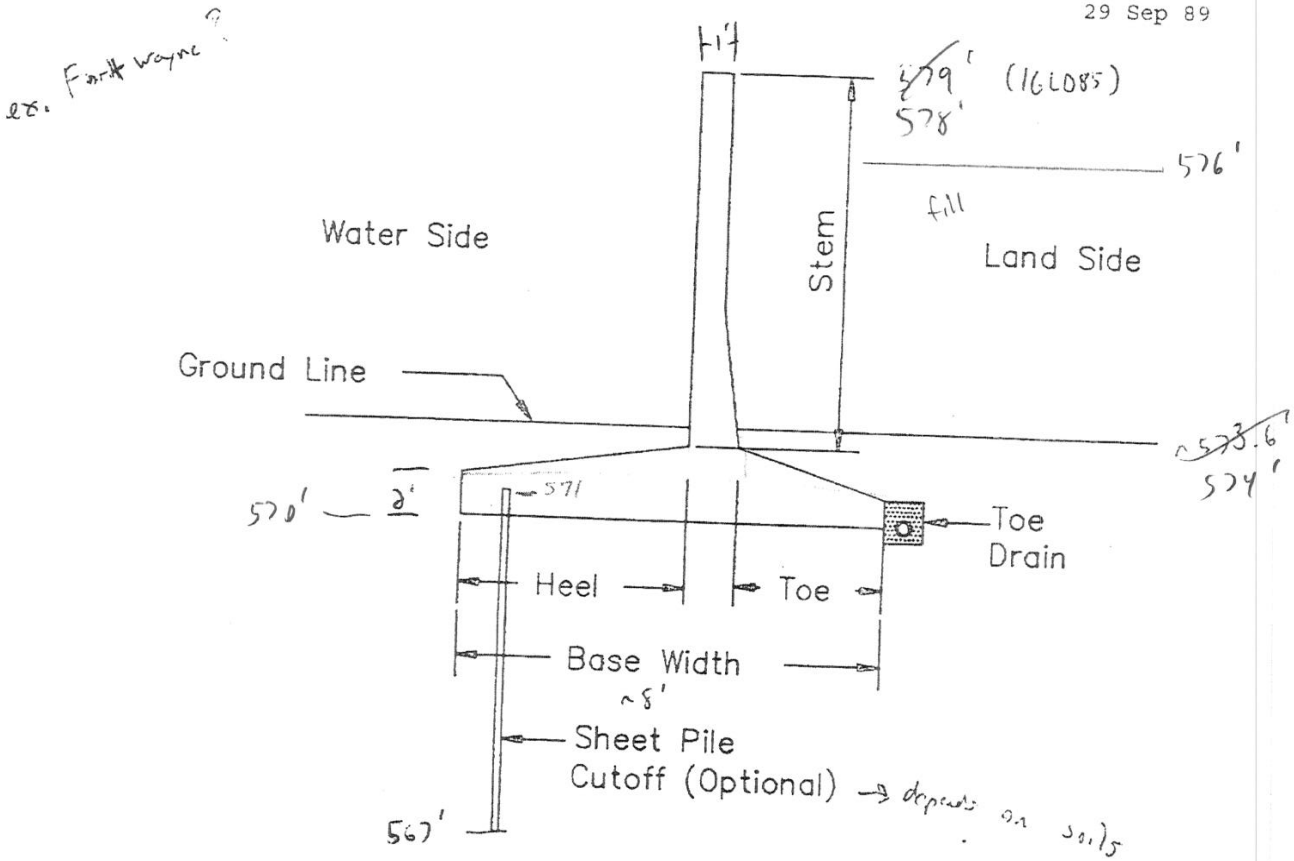

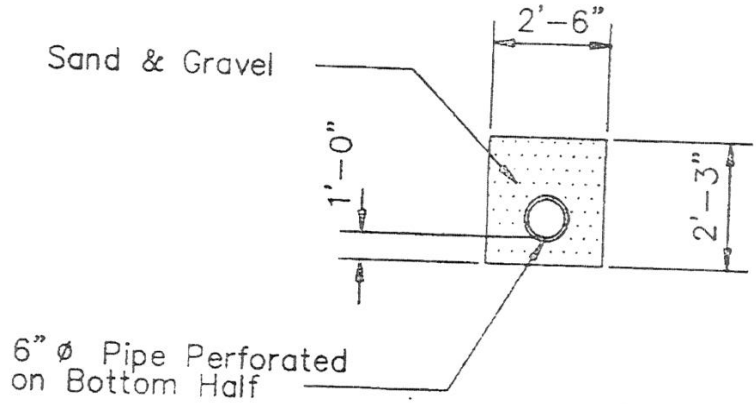

Figure 7-2. T-type flood wall--horizontal base

PROJECT TITLE: Detroit Beach (Frenchtown) Section 205	COMPUTED BY: SAW	DATE: 3/3/09	SHEET: 1 of 1
SUBJECT: Engineering Appendix Quantity Calculations South Flank SSP Wall	CHECKED BY: AJ	DATE: 3/4/09	REFERENCE DWG:

South Flank Requires SSP Wall Section

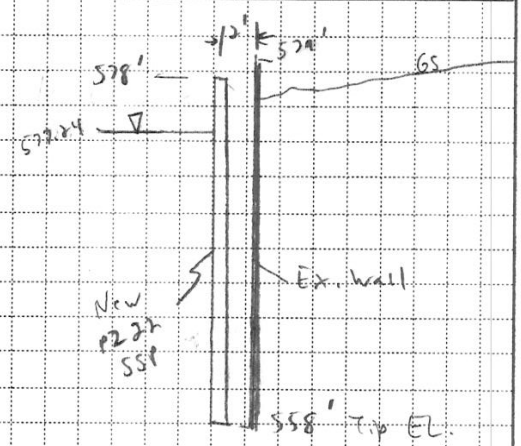

Length = 450 ft

Assume PZ-22 (22 lbs/ft²)

Top of wall = 578 ft

Tip Elev. = 558 ft

Area of SSP

= 450 ft × (578 ft − 558 ft) = 450' × 20' = 9000 sq. ft

→ $9000\ ft^2 \times \frac{22\ lbs}{ft^2} \times \frac{1\ Ton}{2000\ lbs} = 99$ Tons

Say 100 Tons

Steel Cap

LF of Steel Cap = 450 LF

Cut Existing Wall to ground surface

Assume 2 ft ∴ Area = 450' × 2' = 900 SF steel to cut & remove

Backfill for New SSP (in front of remaining wall)

Assume half of new SSP embedded

20'/2 = 10' × 2' wide × 450' = 9000 ft³ × $\frac{1\ cy}{27\ cf}$ = 333 cy

→ Say 350 cy

Reseed Area = 2' × 450' = 900 sq ft

Detroit Beach (Frenchtown) Section 205 - Add'l Elevations Qty Summary

17-Jun-09 Calculated by: SAW Checked by: BJG

Assumptions

1) Dike repair consists of clearing brush and removing trees up to 14 inches, removal and replacement of clay, and resodding.
2) The berms along Lake Erie will not be considered for repair/replacement.

3) Quantity for compacted clay required includes a loose material factor of 1.35.

4) Quantities for four additional top of wall elevations were computed. They are 576.6', 577.24', 580' and 581'. Calculations for 578' were referenced.

Flanking Dike Repair Qtys (Vegetation)

Summary		Elevation			
		576.6	577.24	580	581
	UNIT	QTY	QTY	QTY	QTY
Estimated length of repair:	FT	2,800	2,800	2,800	2,800
Area to clear and grub:	SF	54,000	54,000	54,000	54,000
Quantity of clay to remove (in place volume):	CY	3,000	3,000	3,000	3,000
Quantity of clay required (compacted):	CY	0	0	7,270	11,020
Area to resod:	SF	34,160	42,000	76,720	89,040

Flanking Dike Repair Qtys (North Section Concrete Wall)

Summary		Elevation			
		576.6	577.24	580	581
	UNIT	QTY	QTY	QTY	QTY
Estimated length of repair:	FT	1,200	1,200	1,200	1,200
North Flank Area Dike Removal:	CY	2,500	2,500	2,500	2,500
Wall Foundation Excavation:	CY	1,900	1,900	1,900	1,900
Wall Backfill:	CY	315	625	1,960	2,450
Area to Resod:	SF	13,200	13,200	13,200	13,200
Concrete:	CY	1,185	1,215	1,340	1,380
Steel Reinforcement:	TON	80	82	91	94
Sand & Gravel for 6" Pipe	CY	250	250	250	250
6" PVC Perforated Pipe:	LF	1,200	1,200	1,200	1,200
SSP Cut-off Wall:	TON	53	53	53	53

Flanking Dike Repair Qtys (South Section SSP Wall)

Summary		Elevation			
		576.6	577.24	580	581
	UNIT	QTY	QTY	QTY	QTY
Estimated length of repair:	FT	450	450	450	450
Cut Existing Wall at Ground Surface:	SF	900	900	900	900
Backfill:	CY	350	350	350	350
Area to resod:	SF	900	900	900	900
PZ 22 SSP Wall:	TON	92	96	109	114
Steel Cap:	LF	450	450	450	450

PROJECT TITLE: Detroit Beach (Frenchtown) Section 205	COMPUTED BY: SAW	DATE: 3/26/09	SHEET: 1 of 4
SUBJECT: Additional Top of Wall Elevation Quantity Calculations for Flanks (576.6 ft, 577.24 ft, 581 ft)	CHECKED BY: BJG	DATE: 6/17/09	REFERENCE DWG: calcs for elev. 578 ft

Flanking Dike Repair Qtys (Vegetation)

Length of repair = same for all elevations = 2,800 LF

Area to clear and Grub = same for all elevations = 54,000 SF

Clay removal = same for all elevations = 3,000 CY (in place volume)

Clay Replacement (see sketch)

Qty to replace below 577.3 ft is negligible

therefore clay replacement for 576.6' and 577.24' = 0 CY

At 581' $A = (5' \times \underbrace{(581' - 577.3')}_{18.5}) + 2(\underbrace{9.4' \times 3.2'}_{60.2}) = 78.7$ SF

$V = 78.7\ ft^2 \times 2800\ ft \times 1\ \frac{CY}{27\ CF} = 8161.5$ CY

$\rightarrow 8162$ CY $\times 1.35$ (loose mat'l factor) $= 11019$ CY

$\rightarrow$ say 11,020 CY

Area to Re-Sod (see sketch)

At 581' $(5' + 2(\underbrace{13.4'}_{31.8})) \times 2800' = 89,040$ SF

At 577.24' $(5' + 2(\underbrace{5.0'}_{15})) \times 2800' = 62,000$ SF

At 576.6' $(5' + 2(\underbrace{3.6'}_{12.2})) \times 2800' = 34,160$ SF

PROJECT TITLE: Detroit Beach (Frenchtown) Section 205	COMPUTED BY: SAW	DATE: 3/26/09	SHEET: 2 of 4
SUBJECT: Additional Top of Wall Elevation Quantity Calculations for Flanks (576.6 ft, 577.24 ft, 581 ft)	CHECKED BY: BJG	DATE: 6/17/09	REFERENCE DWG:

North Flank Concrete Wall

Estimated length of repair = same for all elevations = 1200 LF

Existing Dike Removal = same for all elevations = 2,500 CY

Fdn excavation for wall placement and toe drain

= same for all elevations = 1900 CY

Backfill for new wall

At 581' $A = ((581' - 2') - 574') \times 11' = 55$ SF

$V = 55 \text{ SF} \times 1200 \text{ ft} \times \frac{1 \text{ CY}}{27 \text{ CF}} = 2444$ CY

→ say 2,450 CY

At 577.24' $A = ((577.24' - 2') - 574') \times 11' = 14$ SF

$V = 14 \text{ SF} \times 1200 \text{ ft} \times \frac{1 \text{ CY}}{27 \text{ CF}} = 622$ CY

→ say 625 CY

At 576.6' $A = ((576.6' - 2') - 574') \times 11' = 7$ SF

$V = 7 \text{ SF} \times 1200 \text{ ft} \times \frac{1 \text{ CY}}{27 \text{ CF}} = 311$ CY

→ say 315 CY

Area to Re-sod behind wall

$A = 11' \times 1200' = 13{,}200$ SF = same for all elevations

PROJECT TITLE: Detroit Beach (Frenchtown) Section 205	COMPUTED BY: SAW	DATE: 3/26/09	SHEET: 3 of 4
SUBJECT: Additional Top of Wall Elevation Quantity Calculations for Flanks (576.6 ft, 577.24 ft, 581 ft)	CHECKED BY: BJG	DATE: 6/17/09	REFERENCE DWG:

Concrete (see figure)

At 581' $A = [(581' - 574') \times 1'] + (8' \times 2') + (\frac{1}{2} \times 2' \times 8') = 31\ SF$
(7; 16; 8)

$V = 31\ SF \times 1200\ ft \times \frac{1\ CY}{27\ CF} = 1378\ CY$
→ say 1380 CY

At 577.24' $A = [(577.24' - 574') \times 1'] + (8' \times 2') + (\frac{1}{2} \times 2' \times 8') = 27.24\ SF$
(3.24; 16; 8)

$V = 27.24\ SF \times 1200\ ft \times \frac{1\ CY}{27\ CF} = 1211\ CY$
→ say 1,215 CY

At 576.6' $A = [(576.6' - 574') \times 1'] + (8' \times 2') + (\frac{1}{2} \times 2' \times 8') = 26.6\ SF$
(2.6; 16; 8)

$V = 26.6\ SF \times 1200\ ft \times \frac{1\ CY}{27\ CF} = 1182\ CY$
→ say 1,185 CY

Steel Reinforcement — Assume 5 lb steel per CF of concrete

At 581' $W = 1380\ CY \times 27\ CF/CY \times 5\ lb/CF \times \frac{1\ Ton}{2000\ lb} = 93.15\ tons$
→ say 94 tons

At 577.24' $W = 1215\ CY \times 27 \times 5 \times \frac{1}{2000} = 82\ tons$

At 576.6' $W = 1185\ CY \times 27 \times 5 \times \frac{1}{2000} = 80\ tons$

Toe Drain and cut off wall

All qtys same for all elevations. Sand + gravel for 6" pipe = 250 CY

6" perforated PVC pipe = 1,200 LF

SSP cut off wall = 53 tons

PROJECT TITLE: Detroit Beach (Frenchtown) Section 205	COMPUTED BY: SAW	DATE: 3/26/09	SHEET: 4 of 4
SUBJECT: Additional Top of Wall Elevation Quantity Calculations for Flanks (576.6 ft, 577.24 ft, 581 ft)	CHECKED BY: BJG	DATE: 6/17/09	REFERENCE DWG:

South Flank SSP wall Section

Length of repair = same for all elevations = 450 ft

Cut existing wall to ground surface = same for all elevations = 900 SF

Area to Re-sod behind new wall = same for all elevations = 900 SF

Steel cap for new wall = same for all elevations = 450 LF

Backfill for new wall = approx. same for all elevations = 350 CY

New SSP Assume PZ-22 (22 lbs/ft²)

At 581' A = 450 ft × (581' − 558') = 10350 SF
23

W = 10,350 SF × 22 lbs/SF × 1 ton/2000 lbs = 114 tons

At 577.24' A = 450 ft × (577.24' − 558') = 8658 SF
19.24

W = 8658 SF × 22 lbs/SF × 1 ton/2000 lbs = 95.2 tons

→ say 96 tons

At 576.6' A = 450 ft × (576.6' − 558') = 8370 SF
18.6

W = 8370 SF × 22 lbs/SF × 1 ton/2000 lbs = 92 tons

PROJECT TITLE: Detroit Beach (Frenchtown) Section 205	COMPUTED BY: SAW	DATE: 6/16/09	SHEET: 1 of 2
SUBJECT: Additional Top of Wall Elevation Quantity Calculations for Flanks - Addendum for 580 ft	CHECKED BY: BJG	DATE: 6/17/09	REFERENCE DWG: 3/26/09 calcs

Clay Replacement (See sketch)

At 580' $A = (5' \times \underbrace{(580' - 577.3')}_{13.5}) + 2(\underbrace{8' \times 2.4'}_{38.4}) = 51.9$ SF

$V = 51.9\ ft^2 \times 2800\ ft \times \frac{1\ CY}{27\ CF} = 5382$ CY

→ 5382 CY × 1.35 (loose material factor) = 7266 CY

→ say 7270 CY

Area to Re-sod (See sketch)

At 580' $(5' + \underbrace{2(11.2')}_{22.4}) \times 2800' = 76{,}720$ SF

Backfill for new concrete wall (See figure)

At 580' $A = ((580' - 2') - 574') \times 11' = 44$ SF

$V = 44\ SF \times 1200\ ft \times \frac{1\ CY}{27\ CF} = 1956$ CY

→ say 1960 CY

Concrete (See figure)

At 580' $A = (\underbrace{(580' - 574')}_{6} \times 1') + \underbrace{(8' \times 2')}_{16} + \underbrace{(\tfrac{1}{2} \times 2' \times 8')}_{8} = 30$ SF

$V = 30\ SF \times 1200\ ft \times \frac{1\ CY}{27\ CF} = 1333$ CY

→ say 1340 CY

PROJECT TITLE: Detroit Beach (Frenchtown) Section 205	COMPUTED BY: SAW	DATE: 6/16/09	SHEET: 2 of 2
SUBJECT: Additional Top of Wall Elevation Quantity Calculations for Flanks - Addendum for 580 ft	CHECKED BY: BSG	DATE: 6/17/09	REFERENCE DWG:

Steel Reinforcement

Assume 5 lb steel per CF of concrete

At 580' $W = 1340\ CY \times 22 \frac{CF}{CY} \times 5 \frac{lb}{CF} \times \frac{1\ ton}{2000\ lb} = 90.5$ tons

→ say 91 tons

New SSP (South Plank) Assume PZ-22 (22 lb/SF)

At 580' $A = 450\ ft \times (580' - 558')$ = 9900 SF

22

$W = 9900\ SF \times 22 \frac{lb}{SF} \times \frac{1\ ton}{2000\ lbs} = 109$ tons

Side Slope Surface Length

1 inch = 2 feet

Assumed Typ. Section

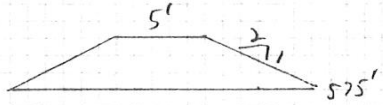

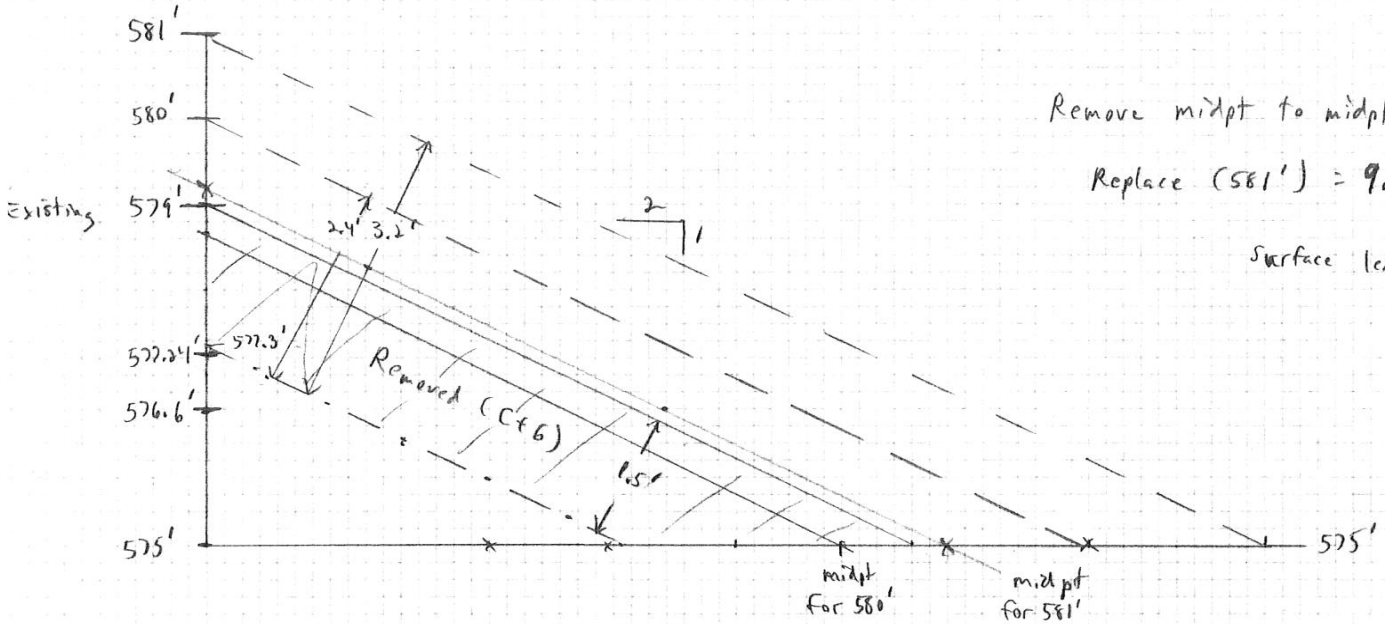

Remove midpt to midpt = 7.1' (1.5' thick layer)

Replace (581') = 9.4' Replace (580') = 8'

Surface lengths
581' = 13.4'
577.24' = 5.0'
576.6' = 3.6'
580' = 11.2'

Drawn by: SAW

Checked by: BJG

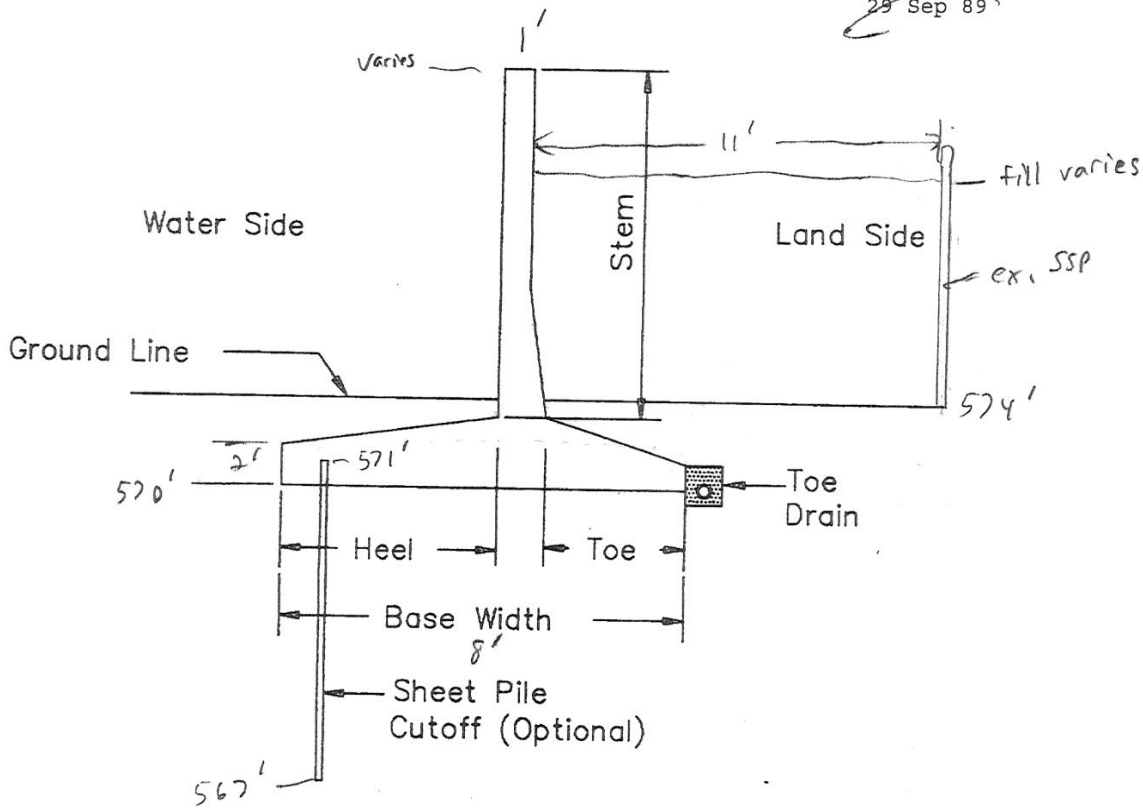

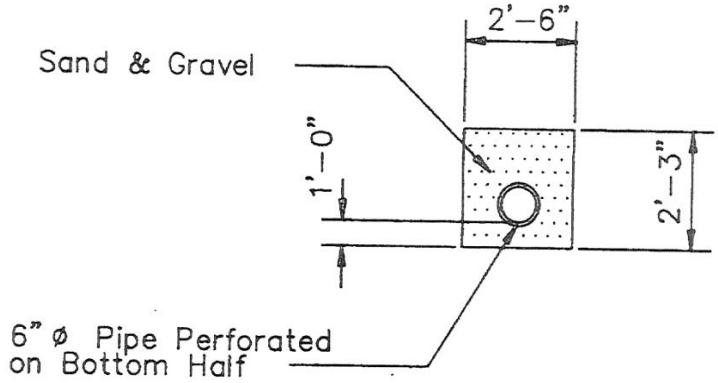

~~Figure 7-2. T-type flood wall--horizontal base~~

US Army Corps of Engineers ®
Detroit District

APPENDIX A-4

SITE PHOTOGRAPHS

Detroit Beach Section 205
Frenchtown Township, Michigan

Photo 1
Typical levee section along the south flank of project.

Photo 2
Proposed area along the south flank for new SSP wall section.

Photo 3
Planter boxes along top of levee at the Detroit Beach Boat Club Marina.

Photo 4
Southeast corner of project. Note the newer section of SSP wall.

Photo 5
Existing SSP wall looking toward the north.

Photo 6
Existing beach area along the wall, looking toward the south.

Photo 7
Transition area of the old SSP wall to the newer SSP wall at the north end of the project.

Photo 8
Typical levee section along the north flank of project, note SSP wall on the right side.

US Army Corps of Engineers ®
Detroit District

APPENDIX A-5

ADVANCED MEASURES O & M MANUAL

Detroit Beach Section 205
Frenchtown Township, Michigan

ADVANCE MEASURES FLOOD PROTECTION PROJECT
DETROIT BEACH, FRENCHTOWN TOWNSHIP, MICHIGAN

OPERATION AND MAINTENANCE MANUAL

TABLE OF CONTENTS

PARAGRAPH	SUBJECT	PAGE NO
	PART I - INTRODUCTION	
1	AUTHORIZATION	1
2	LOCATION	1
3	DESCRIPTION OF PROJECT	1
4	PROTECTION PROVIDED	1
5	CONSTRUCTION HISTORY	2
6	LOCAL COOPERATION	2
	PART II - OPERATION AND MAINTENANCE	
1	GENERAL PROCEDURES	4
2	FEATURES OF THE PROJECT	6
3	MAINTENANCE	8
4	OPERATION	9

APPENDIX A

Inspection/Report Forms

APPENDIX B

Project Maps, Typical Cross Sections and As Built Drawings

APPENDIX C

Section 208.10, Title 33 of the Code of Federal Regulations

APPENDIX D

Easement Estates

APPENDIX E

Real Estate Drawings

APPENDIX F

Points of Contact

APPENDIX G

Local Cooperation Agreement

(REVISED FEBRUARY 1992)

PART I - INTRODUCTION

1. **AUTHORIZATION.** Emergency diking for flood protection was provided at Detroit Beach, Frenchtown Township, Michigan (hereinafter designated as the Project). The project was authorized under the authority granted to the Chief Engineers by section 5 of the Flood Control Act 1941, Public Law 77-288 as amended by Public Law 84-99 (1955) (33 U.S.C. 701n).

2. **LOCATION.** The project is located in southeastern Monroe County in the southeastern portion of Michigan's Lower Peninsula. Frenchtown Township is located on the western shore of Lake Erie, approximately 32 miles south of Detroit, Michigan, and 16 miles north of Toledo, Ohio.

3. **DESCRIPTION OF PROJECT.** The project consists of the repair and rehabilitation of the existing flood protection system built during the Operation Foresight program in 1973, as well as a local flood protection system completed by Monroe County in 1959. The major project features are listed below:

a. Raised/regraded, existing clay dike 1,210 cubic yards.
b. Constructed 4,925 cubic yards of clay dike.
c. Installed 10,783 square feet of steel sheet pile wall.
d. Raised 3,308 lineal feet of existing sheet pile wall.
e. Straighten and repaired 680 feet of existing sheet pile wall and replaced 86 flapgates.
f. Placed 1,935 tons of stone and 720 tons of gravel fill
g. Placed 1,502 cubic yards of clay fill between new sheet pile wall and the existing concrete wall.
h. Placed 5,192 tons of riprap at toe of new and existing sheet pile walls.
i. Constructed 45 lineal feet of 3'x 3' sand filled cribs.
j. Placed 5,240 square yards of sod and 11,008 square yards of seed.
k. Placed 1,475 square yards of plastic filter fabric beneath armor stone or gravel.
l. Placed 452 tons of underlayer stone and 1,220 tons of cover stone.

The extent of the Project works is shown on the Project Map, with the detailed Project Plan shown on the As Built drawings, all included in Appendix B.

4. **PROTECTION PROVIDED.** Approximately 380 residential structures situated in a 220 acre area were provided flood protection as a result of the Project. Backwater structures were built to a 578.4 foot elevation, while the lake front structures were constructed to a 581.0 foot elevation since they were directly subjected to the wave action of Lake Erie. These elevations refer to the International Great Lakes Datum of 1955

(known as I.G.L.D.) which is the 1955 Mean Water Level (M.W.L.) at Father Point, Quebec. Protection afforded by the Project includes protection from flooding due to high water levels on Lake Erie, such as those experienced during the record Great Lakes water levels which occurred around 1973 and 1986. Frenchtown Township, under the Local Cooperation Agreement (L.C.A), is responsible for keeping the protected area free of flood and drainage waters at all times.

5. **CONSTRUCTION HISTORY.** Construction of the flood protection improvements for the Detroit Beach Area was initiated on 3 December 1985 and completion of the final modification was on 29 December 1986. The work was done by E.S. Wagner Company, Inc. of Oregon, Ohio under Detroit District Contract No. DACW35-85-C-0005.

6. **LOCAL COOPERATION.**

a. **Local Cooperation Requirements.** The project was constructed subject to the condition that local the sponsor (Frenchtown Township, Michigan) gave assurances satisfactory to the Secretary of the Army, that it would:

i. Provide without cost to the United States all lands, easements and right of way for the emergency work, including, but not limited to, levee, borrow, spoil and access right of way. See Appendix D & E, respectably.

ii. Hold and save the United States free from all claims for damages attributable to the construction works except for damages due to the fault or negligence of the United States or its contractors.

iii. Contribute in cash thirty percent (30%) of the actual first cost of all protection works, less the Government Estimate for any designated canal closure. Fifteen percent (15%) of the thirty percent (30%), was provided by the Department of Natural Resources, State of Michigan. The remaining fifteen percent (15%) was provided by Frenchtown Township. (Note: Canal closures were not required for this project.).

iv. Maintain and Operate all works after completion, for a period of 25 years, without cost to the United States in a manner satisfactory to the Chief of Engineers. The foregoing maintenance and operation requirement extends to interrelated features of all protective works under control of the Community such as interior drainage and pumping facilities.

v. Comply with applicable provisions of the "Uniform Relocation Assistance and Real Property Acquisition Policies Act of 1970", Public Law 91-646, approved 2 January 1971, in acquiring lands, easements and rights of way for the project and

inform affected persons of pertinent policies, procedures and benefits in connection with the Act.

vi. Comply with Section 601 of Title VI of the Civil Rights Act of 1964 (P.L. 88-352) and Department of Defense Directive 5500.11 issued pursuant thereto published in Part 300 of Title 32, Code of Federal Regulations, in connection with the maintenance and operation of the project.

vii. Finish dress and place sod on the clay protective works or seed with a good sod producing seed mixture after completion of the work and prior to the end of the next seeding season.

viii. Release and forever discharge the United States, its officers, employees, agents and assigns, in the prosecution of the proposed advanced measures protective works herein contemplated from all claims, demands, actions and causes of action whatsoever, which may arise by reason of, or in any manner have grown out of, or alleged to have grown out of, the construction of the said protective works as herein contemplated.

ix. Grant permission to the United States of America, its officers, employees, agents and assigns and the Government contractors, their officers, employees, agents and assigns, to enter upon Community lands and rights of way, including any additional rights of way to be obtained by said Community, for the purpose the emergency flood control work hereinbefore described.

b. **Assurances Furnished by Local Interest.** By a signed agreement between the United States and the Frenchtown Township, dated 21 August 1985, Frenchtown Township assured the United States that they would provide each of the items of the local cooperation. The agreement for assurances was approved by the District Engineer.

PART II - OPERATION AND MAINTENANCE

1. GENERAL PROCEDURES.

a. **Regulations.** Section 208.10, Title 33 of the Code of Federal Regulations, contains regulations for the operation and maintenance of protection works, approved by the Secretary of the Army in accordance with authority contained in Section 3 of the Flood Control Act of 22 June 1936, as amended and supplemented (See Appendix C).

b. **Procedure for Insuring Compliance with Regulations.** The District Engineer will be kept informed as to the extent of compliance with approved regulations for operation and maintenance through regular periodic inspection of the project and through careful analysis of the semiannual reports which the operating and maintaining agency, Frenchtown Township, shall submit in accordance with the regulations. The District Engineer's view as to any measures required to conform to the approved regulations will be furnished to the agency responsible. In any case where the District Engineer has been unable to arrange satisfactory compliance, or where there is question or disagreement as to the measures required for compliance, a report of the circumstances, together with the recommendations of the Division and District Engineer, will be submitted to the Chief of Engineers for consideration. The District Engineer or his authorized representatives shall have access at all times to all portions of the project works.

c. **Operations and Maintenance Manual.** This manual of operations and maintenance has been prepared and furnished to the operating and maintaining agency to assist them in carrying out their obligations, for a period of 25 years, by providing information and advice as to the operation and maintenance of the project. Details and suggestions for complying with the regulations are given in the following paragraphs.

d. **Superintendent.** Frenchtown Township shall designate an official, called the Superintendent, who has read the Operation and Maintenance Manual in full and understands all of the requirements, and is responsible for carrying out the provisions of maintenance and operation of the project. The Superintendent shall be designated from available township personnel, whose name, address and telephone number shall be given to the District Engineer. In case of any change in the superintendent, the District Engineer shall be notified. In addition to the duties which are outlined in other portions of the manual, the Superintendent has a general responsibility for developing and maintaining an organization which can carry out efficiently the

maintenance and operation of all structures and facilities during high water or rain storm periods and the inspection and maintenance of the project works at all other times.

e. **Improvements or Alterations to the Project.** Drawings or prints of proposed improvements or alternations to the protective works are required and should be submitted, to the District Engineer, U.S. Army Engineer District, Detroit, Corps of Engineers, at the address contained in Appendix F. Submission of the drawings should be sufficiently in advance of initiation of the proposed construction to permit adequate study and consideration of the work. Drawings in duplicate, or reproducible prints, showing any improvements or alternations as finally constructed should be furnished to the District Engineer after completion of the work.

f. **Semiannual Report to the Corps of Engineers.** A semiannual report shall be submitted to the District Engineer, U.S. Army Engineer District, Detroit, Corps of Engineer, at the address contained in Appendix F. The semiannual report periods are from 1 February through 31 July, and from 1 August through 31 January. Reports shall be submitted within 30 days after the end of each reporting period. The report should cover inspection and maintenance of the protective works and should include dated inspection checklists or report sheets (See Appendix A) made during the period covered by the reports. In case repairs have been made, either temporary or permanent, the nature and dates of construction are pertinent and should be included in the report. Prints of any photographs showing the protective works during storms creating high waves or backwater flooding are desired whenever available.

g. **Periodic Inspections.** General (overall) inspections should be made at the following times:

i. At a minimum once every six months in conjunction with the semiannual report.

ii. Immediately following each major storm or high water period.

iii. At such times as may be deemed necessary by the Superintendent.

h. **Joint Inspection.** It is desired that a joint inspection of the works be made by the District Engineer or his authorized representatives, and the superintendent. Arrangements for this inspection should be initiated by the Superintendent. Points of contact with telephone numbers are contained in Appendix F.

i. **Check Sheets.** To facilitate inspection, either routine or emergency, there is a suggested form of a check sheet and supplemental report provided in Appendix A. These, or similar forms, should be used in each inspection to insure that no feature of the protective system is overlooked. Any item requiring repairs should be noted in a supplemental report and conditions of items should be indicated by a check, on the check sheet.

2. **FEATURES OF THE PROJECT.**

a. **Design.** The Project incorporates a number of design contracts. In 1973, the Corps of Engineers constructed emergency flood control structures which consisted of rock and sand cribs on the lake side, and clay dikes to prevent backwater flooding. In 1959 the Monroe County Drain Commission constructed a sheet pile wall on the lake side of the Project. This wall is now incorporated into the Project as described below.

b. **Protective Works.** The protective works include:

i. **Raising and repairing existing clay dikes and the construction of new clay dikes to the elevation of 578.4 feet (I.G.L.D.).** The clay dikes have a top width of five feet, plus a landside and waterside slope of 1 vertical on 2 horizontal. The clay dikes are sodded on the waterside and seeded on the landside. The project utilizes existing clay dikes in a number of areas. These should be inspected as well as the ones which were recently repaired or raised.

ii. **Installing 10,783 square feet of new steel sheet pile wall.** At the north and south ends of the Project, it was necessary to construct new steel sheet pile walls. These areas appear to be subjected to the most severe wave action and ice loading. See details provided in Appendix B.

iii. **Raising 3,308 lineal feet of existing sheet pile wall.** A twelve (12) inch high extension was placed on the existing No. 7 gauge "Armco" steel sheet pile wall. A flat plate supported by gusset plates was welded to the existing cap. For details see Appendix B. This extension was designed to absorb spray from high wave conditions.

iv. **Straightening and repairing existing sheet pile wall.** At various locations, approximately 680 feet of existing sheet pile wall had to be straightened, anchors had to be reconnected, and holes and other damage had to be repaired. In addition, 86 flapgates had to be replaced.

v. **Placing stone and clay fill behind existing sheet pile wall.** In order to insure integrity of the raised existing wall when subjected to wave or ice forces, stone and clay were placed behind it. See details in Appendix B. Note that the existing sheet pile wall is an anchor wall.

vi. **Placing 5,192 tons of riprap at the toe of the new and existing sheet pile walls.** Riprap (2000 pounds to one ton) was placed at the toe of the sheet pile walls to prevent scour as well as add stability to the walls. The sheet pile wall was not driven very deep, and the stone is absolutely necessary for stability of the structure. For a cross section see Appendix B.

vii. **Constructing sand cribs and special structures.** Only 45 lineal feet of sand crib was needed in the Project. At the Detroit Beach Association marina, the Township requested, during construction, that the Corps of Engineers incorporate a form of clay filled cribs along with stoplogs in lieu of raising the existing clay dikes.

viii. **Installing flashboard dikes.** Flashboard dikes were constructed with a top elevation of 578.4 feet (I.G.L.D.). The materials used in the construction of the flashboard dikes are as follows:

A. 2 inch diameter, extra strong (Schedule 80), 10 foot long straight steel pipes conforming to ASTM A53.

B. 2"x 6" lumber, No. 2 grade, 14 foot lengths, and treated with Type CCA preservative.

C. Wire, #9 gauge, galvanized.

D. Clay backfill with a three foot crest width, two horizontal to one vertical landside slope, and seeded.

E. Riprap, installed to a 577.6 foot (I.G.L.D.) elevation and placed on a one vertical to two horizontal slope at flashboard toe.

F. Polyethylene sheeting: 6 mil thick.

c. **Source of Materials.**

i. All clay, topsoil, sod, seed, stone, and sand were obtained from local sources.

ii. The materials used to construct the sand crib and flashboard dikes (except those listed in item i above) were furnished by the government.

iii. Flapgates were obtained from Waterman Industries, Inc.

d. **Interior drainage is to be provided by the Township according to the Local Cooperation Agreement.** Once the flood protection works have been completed, it may be necessary to reconsider the interior drainage system for adequacy.

3. **MAINTENANCE.**

a. **General.** The Superintendent is to make periodic inspections, to take immediate steps to remedy any adverse conditions disclosed by such inspections, and to provide for any periodic repairs and all adjustments that may be required to restore or preserve all the protective works. Bench mark locations and elevations for use in maintenance work are available on the drawings contained in Appendix B. These bench marks are referenced to IGLD (1955).

b. **Clay Dikes.** Earth sections shall be checked for evidence of serious surface erosion, riprap washouts, undermining, settlement, seepage paths, objectionable plant growth, animal burrows, unauthorized excavation or removal, and need for reseeding and resodding.

c. **Steel Sheet Pile Walls, Caps, Wall Extensions.** The stability of both the new cantilever steel pile wall and the rehabilitated sheet pile wall depends on the full finished cross sections shown in Appendix B. Any deflection in the wall is indicative of a problem, and should be analyzed immediately. Loss of fill behind the wall is indicative of a serious seepage problem. All steel should be checked for any evidence of bucking, cracked welds or loosened bolted connections. Fill over the anchor must be maintained. The wall extensions should be inspected immediately following exposure to severe ice loading.

d. **Flapgates.** Flapgates should be checked to assure proper functioning; that is to open and seal completely. Seating surfaces shall be clean and free from corrosion. Damaged flapgates shall be repaired and replaced as necessary.

e. **Riprap.** Riprap must be checked to assure it remains as shown in the cross sections provided in Appendix B. The riprap is required for stability as well as integrity of the structures. Should the riprap be washed out or settled, additional riprap of appropriate size, must be placed immediately. Since riprap is so essential for stability, it should be inspected at least quarterly.

f. **Right of way.** The permanent right of way should be

maintained free and clear of all obstructions, to facilitate inspection and repair.

4. **OPERATION**

a. **Storm Observations.** Observation should be made, if possible, of wave action during lake storms and during periods of high water to note any locations which may be damaged, or have been damaged. When it is anticipated that damage may occur, all necessary measures must be taken to provide protection for these areas. All damaged areas must be repaired or protected immediately to prevent further damage. The critical periods during which storms may occur will generally be during the spring and fall seasons, although severe storms can occur at any time.

b. **Flood Fighting.** State and Local Government have basic responsibility for conducting flood fighting operations. However, if it is determined that emergency flood fighting assistance is required beyond the State and Local capability during a flood event, the Corps of Engineers can get involved in accordance with Public Law 84-99. This assistance should be requested through the County Emergency Service Office and the Michigan State Police Emergency Procedure Branch, See Appendix F for points of contact.

ADVANCE MEASURES FLOOD PROTECTION PROJECT
DETROIT BEACH, FRENCHTOWN TOWNSHIP, MICHIGAN

APPENDIX A

INSPECTION CHECK LIST AND REPORT FORMS

ADVANCE MEASURES FLOOD PROTECTION PROJECT AT DETROIT BEACH, FRENCHTOWN TOWNSHIP, MICHIGAN

Reason for Inspection: _____

Date: _____

Inspection Made By: _____

Item No.	DESCRIPTION	CONDITION (Check One) Yes (1)	Poor (1)	Fair (2)	Good	None
	GENERAL					
1.	Unauthorized Encroachment on R.O.W					
2.	Unauthorized Changes					
3.	Breaches					
4.	Weed, Brush & Tree Control					
5.	Potential Problem Areas					
	CLAY DIKES / FILL					
6	General Condition					
7.	Crown and Slope Cover					
8.	Crown and Slope Sloughing					
9.	Crown and Slope Scouring					
10	Crown and Slope Settlement					
11.	Evidence of Seepage					
12.	Evidence of Burrowing Animals					
	STEEL SHEET PILE WALLS					
13.	General Condition					
14.	Wall Movement					
15.	Wall Buckling/Bending					
16.	Welded Connections					
17.	Bolted Connections					
18.	Damage to Wave Deflectors					
19.	Damage to Wall					
20.	Loss of Tow Protection (RIPRAP)					
21.	Loss of Stone Fill					
22.	Damage to or Inoperability of Flapgates					
	CRIB STRUCTURES					
23.	General Condition					
24.	Loss of Foundation					
25.	Damage to Wood					
26.	Loss of Fill					
27.	Seepage					
	FLASHBOARD DIKES					
28.	Timber, Steel & Alignment, Condition		X			
29.	Seepage Control		X			
30.	Slope Armor Stone Condition		X			
31.	Fill Material Level/ No Exposed Polyethyline Sheeting Condition		X			

Condition not applicable

(1) If column is checked, supplemental report is required.

(2) If column is checked, supplemental report is required if there is a strong possibility that the condition may become worse.

X If a square marked (X) is checked, furnish detailed description of condition on separate sheet and attach to this report:

SUBMITTED BY: _____

Project Superintendent

ADVANCE MEASURES FLOOD PROTECTION PROJECT
DETROIT BEACH, FRENCHTOWN TOWNSHIP, MICHIGAN

INSPECTION/REPORT FORMS

1. **Supplemental Reports.** As stated previously, a Supplemental Report is required when project deficiencies are observed during an inspection. The following items should be included for each deficiency noted:

   a. Reference to Item No. in checklist.

   b. Location of deficiency (preferably by project stationing).

   c. Description of deficiency.

   d. Photos (if available).

   e. Narrative which should include (if applicable):

      i. Possible causes.

      ii. Need for design analysis or redesign.

      iii. Alternatives for correcting deficiency.

      iv. Alternatives for prevention of recurrence.

      v. Conclusions.

   f. Planned course of action which includes:

      i. Immediate required action.

      ii. Future required action.

   g. Future follow-up/monitoring.

2. **Special Reports.** As stated in the text, special instructions may be necessary for a number of reasons. When such a report is required, reference should be made to the General Inspection Checklist for items to inspect. The following should be included in each Special Report:

   a. Reason for inspection.

   b. Area or feature of project inspected (including the location).

   c. Findings during inspection (if deficiencies or potential problem areas are discovered, they should be addressed as required in the Supplemental Report format).

   d. Conclusions.

   e. Future follow-up/monitoring.

LOCATION MAP

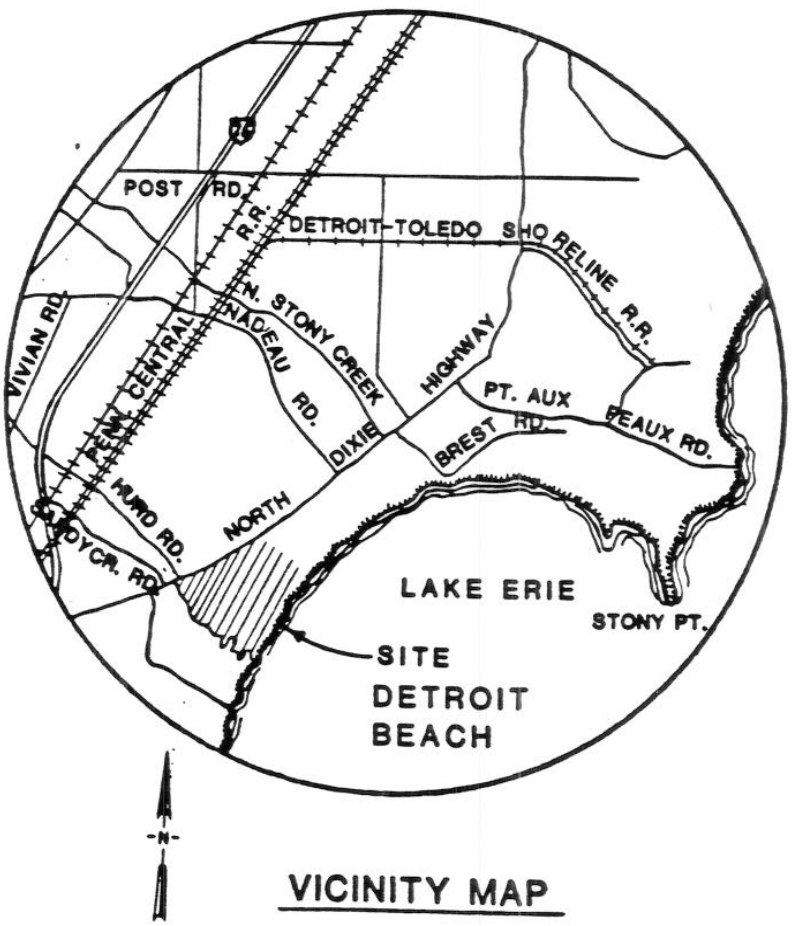

VICINITY MAP

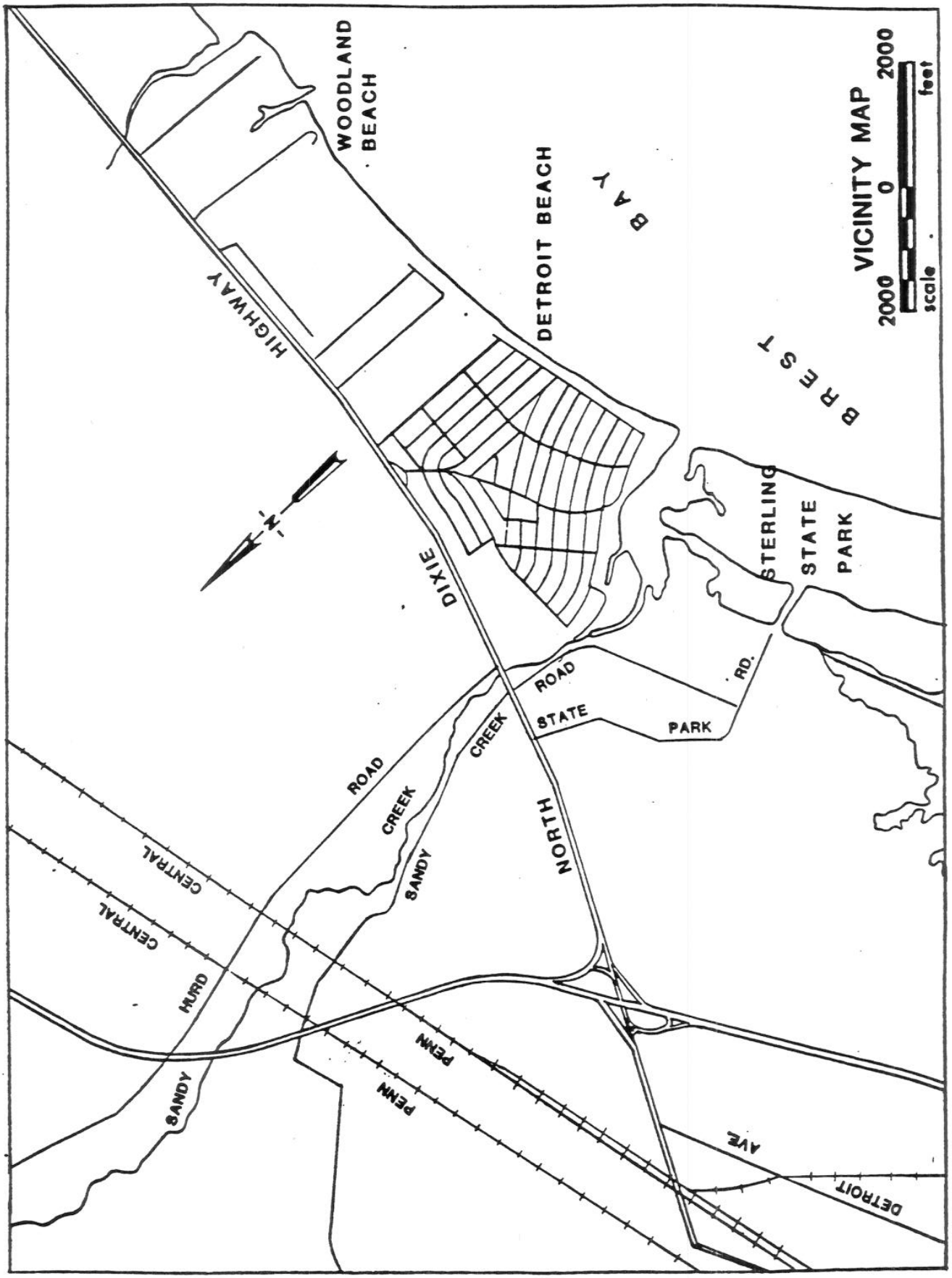
VICINITY MAP
2000
0
2000
feet
scale
WOODLAND BEACH
DETROIT BEACH
BAY
BREST
STERLING STATE PARK
HIGHWAY
DIXIE
N
NORTH
ROAD
STATE
PARK
RD.
CREEK
SANDY
ROAD
CREEK
SANDY
CENTRAL
CENTRAL
HURD
PENN
PENN
AVE
DETROIT

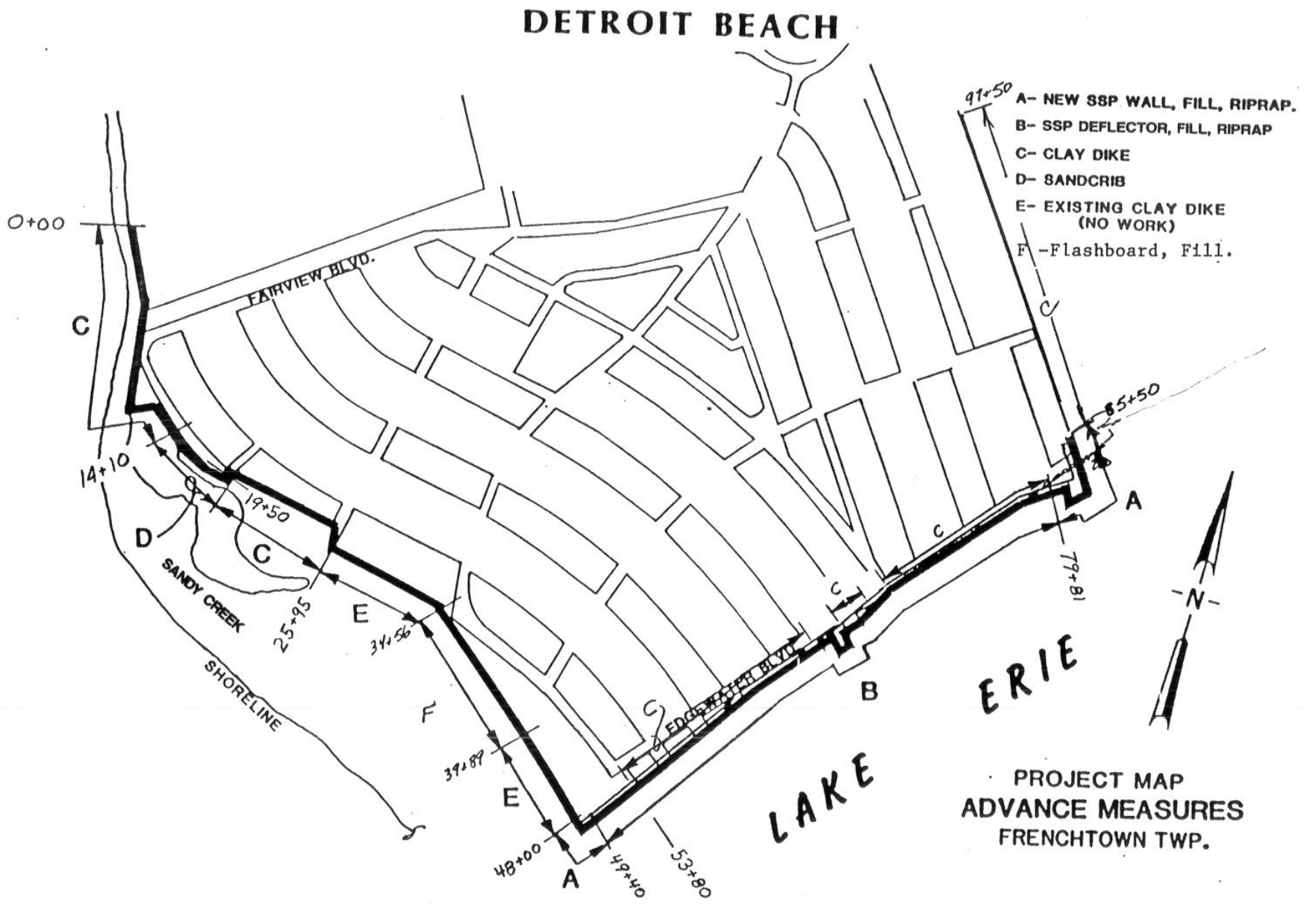
DETROIT BEACH
A- NEW SSP WALL, FILL, RIPRAP.
B- SSP DEFLECTOR, FILL, RIPRAP
C- CLAY DIKE
D- SANDCRIB
E- EXISTING CLAY DIKE (NO WORK)
F -Flashboard, Fill.
0+00
14+10
19+50
25+95
34+56
37+89
48+00
49+40
53+80
79+81
85+50
97+50
FAIRVIEW BLVD.
EDGEWATER BLVD.
SANDY CREEK
SHORELINE
LAKE ERIE
N
A
B
C
D
E
F
PROJECT MAP
ADVANCE MEASURES
FRENCHTOWN TWP.

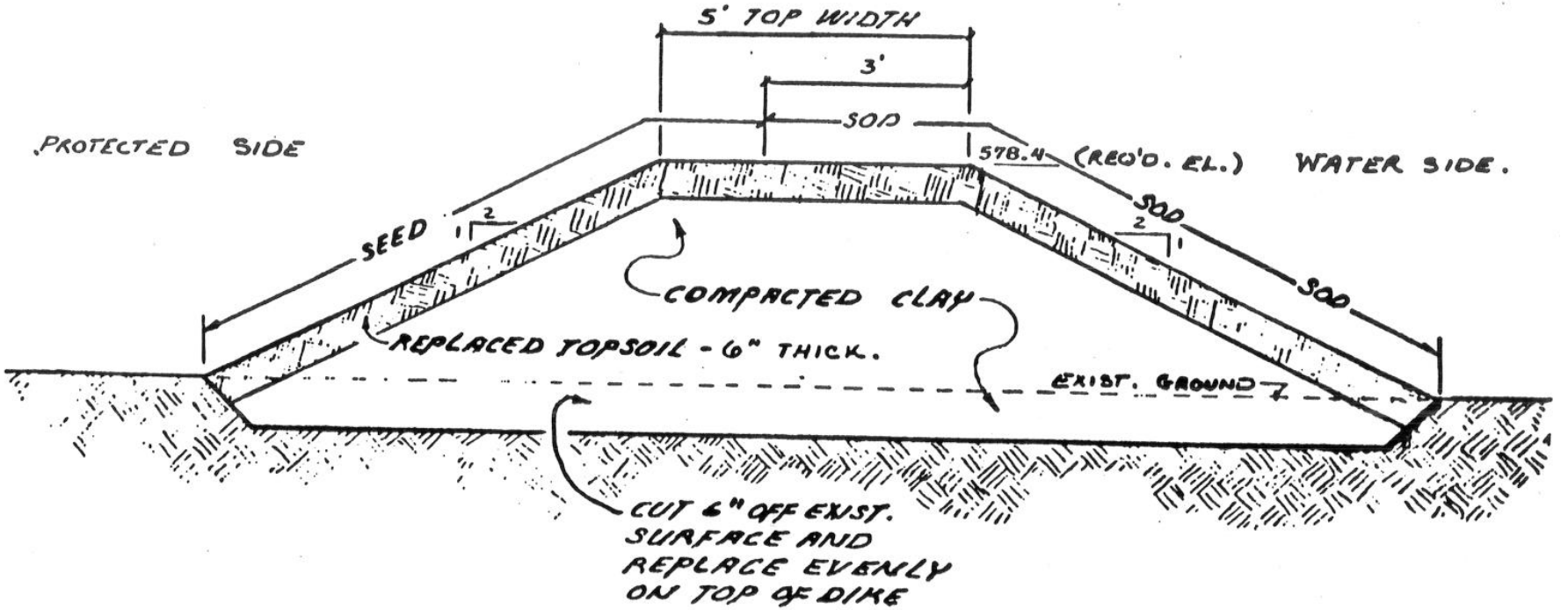

CLAY DIKE TYPICAL CROSS SECTION
NO SCALE

ADVANCE MEASURES

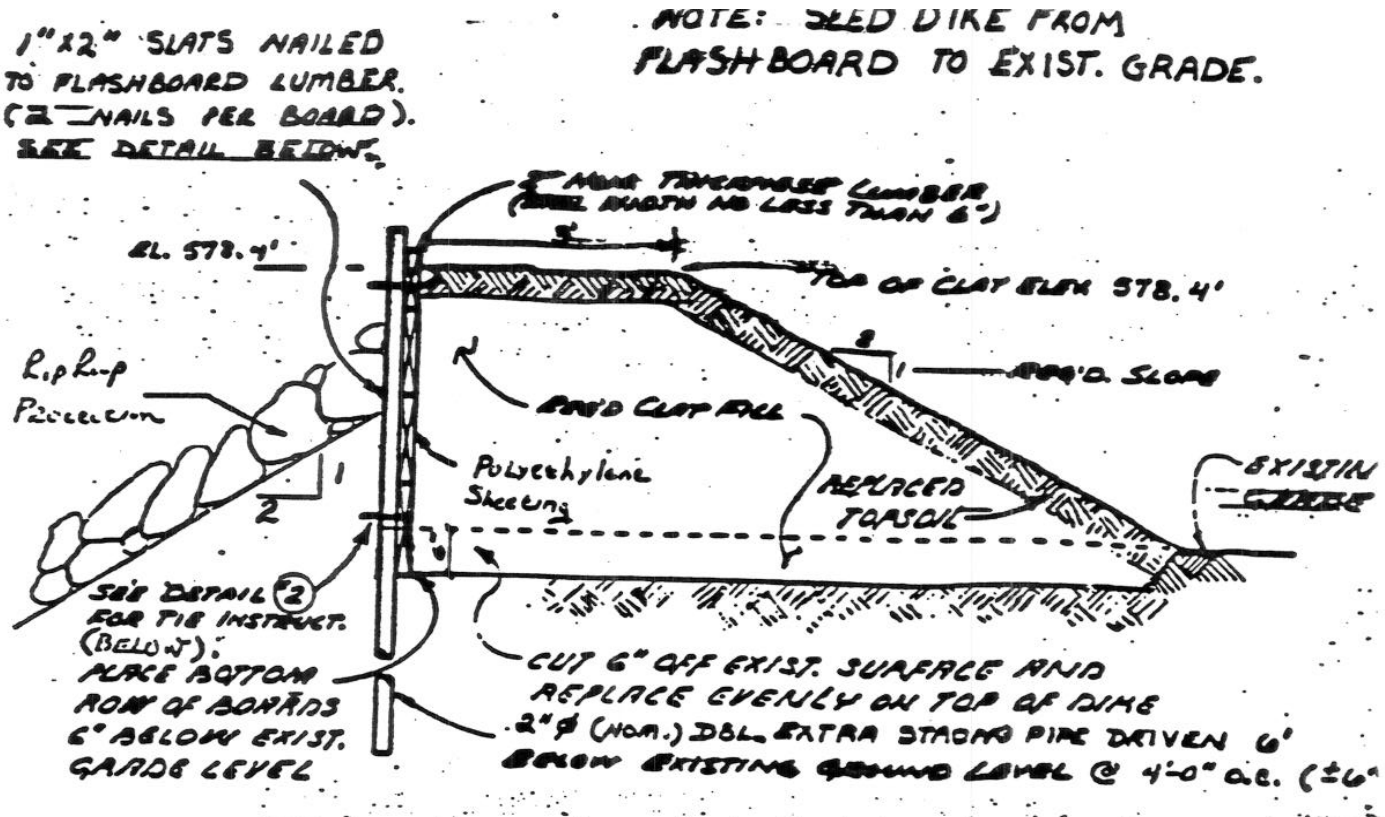

1 CLAY DIKE W/FLASH BOARD

No Scale

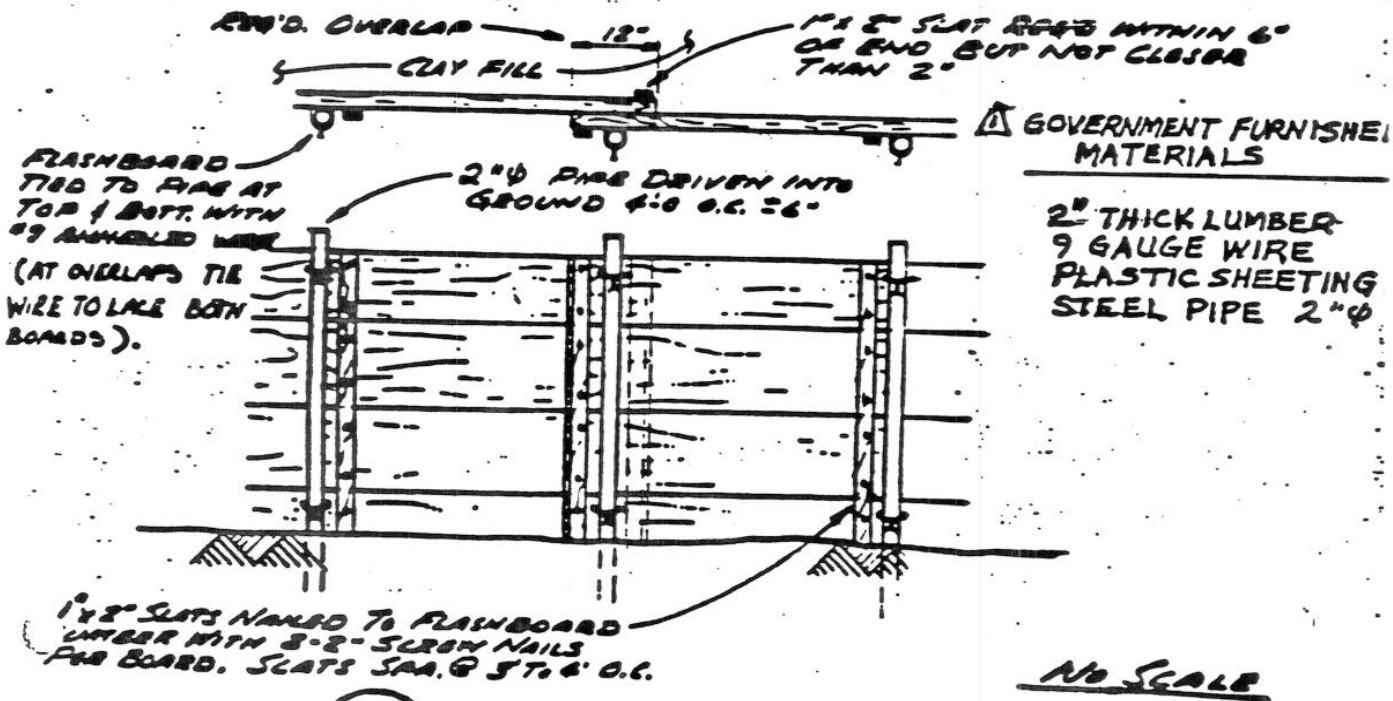

No SCALE

2 FLASH BOARD DETAIL

(FROM DETAIL 1 ABOVE)

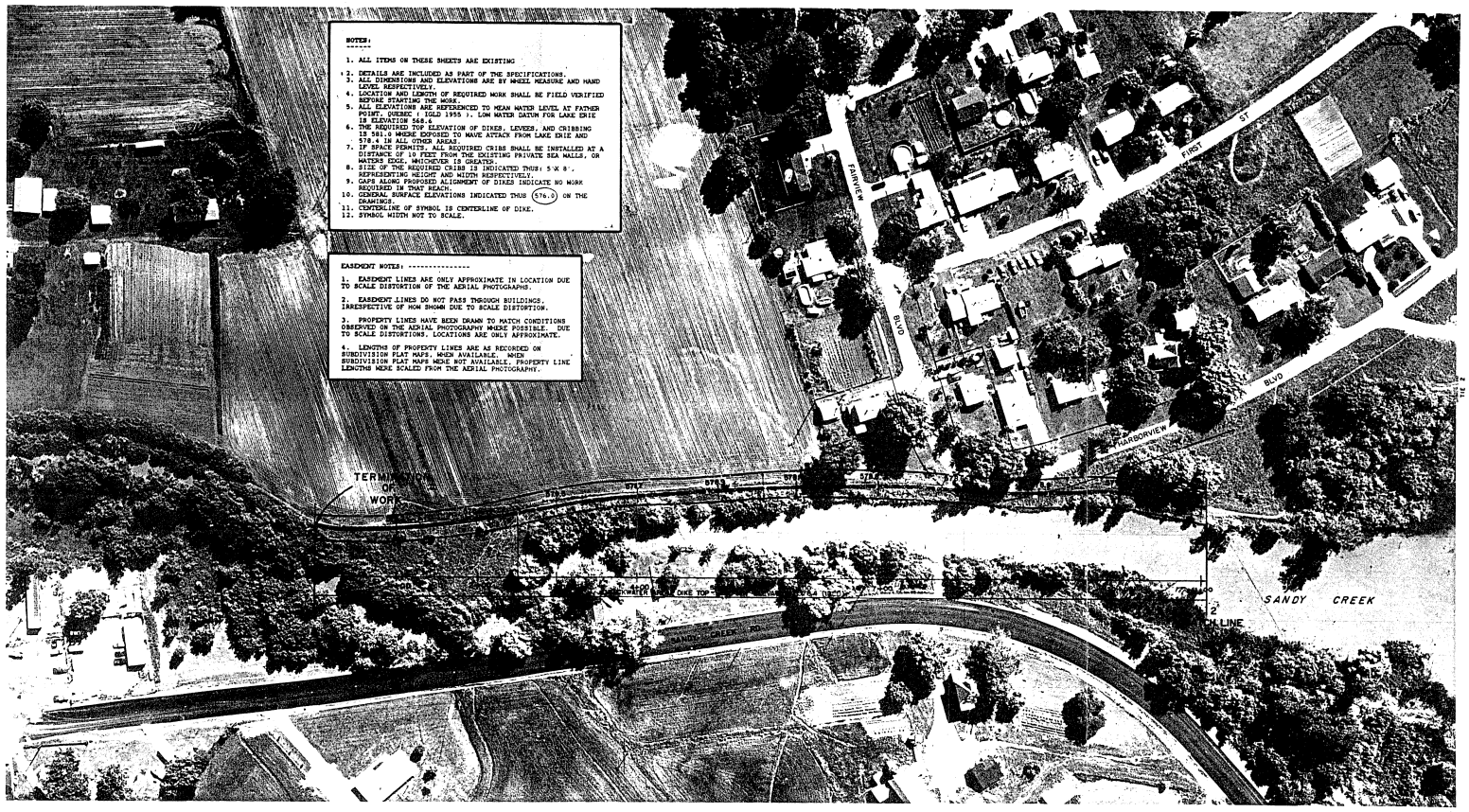

NOTES:

1. ALL ITEMS ON THESE SHEETS ARE EXISTING
2. DETAILS ARE INCLUDED AS PART OF THE SPECIFICATIONS.
3. ALL DIMENSIONS AND ELEVATIONS ARE BY WHEEL MEASURE AND HAND LEVEL RESPECTIVELY.
4. LOCATION AND LENGTH OF REQUIRED WORK SHALL BE FIELD VERIFIED BEFORE STARTING THE WORK.
5. ALL ELEVATIONS ARE REFERENCED TO MEAN WATER LEVEL AT FATHER POINT, QUEBEC (IGLD 1955). LOW WATER DATUM FOR LAKE ERIE IS ELEVATION 568.6
6. THE REQUIRED TOP ELEVATION OF DIKES, LEVEES, AND CRIBBING IS 581.0 WHERE EXPOSED TO WAVE ATTACK FROM LAKE ERIE AND 578.4 IN ALL OTHER AREAS.
7. IF SPACE PERMITS, ALL REQUIRED CRIBS SHALL BE INSTALLED AT A DISTANCE OF 10 FEET FROM THE EXISTING PRIVATE SEA WALLS, OR WATERS EDGE, WHICHEVER IS GREATER.
8. SIZE OF THE REQUIRED CRIBS IS INDICATED THUS: 5'X 8', REPRESENTING HEIGHT AND WIDTH RESPECTIVELY.
9. GAPS ALONG PROPOSED ALIGNMENT OF DIKES INDICATE NO WORK REQUIRED IN THAT REACH.
10. GENERAL SURFACE ELEVATIONS INDICATED THUS (576.0) ON THE DRAWINGS.
11. CENTERLINE OF SYMBOL IS CENTERLINE OF DIKE.
12. SYMBOL WIDTH NOT TO SCALE.

EASEMENT NOTES:

1. EASEMENT LINES ARE ONLY APPROXIMATE IN LOCATION DUE TO SCALE DISTORTION OF THE AERIAL PHOTOGRAPHS
2. EASEMENT LINES DO NOT PASS THROUGH BUILDINGS, IRRESPECTIVE OF HOW SHOWN DUE TO SCALE DISTORTION.
3. PROPERTY LINES HAVE BEEN DRAWN TO MATCH CONDITIONS OBSERVED ON THE AERIAL PHOTOGRAPHY WHERE POSSIBLE. DUE TO SCALE DISTORTIONS, LOCATIONS ARE ONLY APPROXIMATE.
4. LENGTHS OF PROPERTY LINES ARE AS RECORDED ON SUBDIVISION PLAT MAPS, WHEN AVAILABLE. WHEN SUBDIVISION PLAT MAPS WERE NOT AVAILABLE, PROPERTY LINE LENGTHS WERE SCALED FROM THE AERIAL PHOTOGRAPHY.

LEGEND FOR REQUIRED WORK

ROCK CRIB
EXISTING ROCK CRIB
SAND CRIB

CLAY DIKE
WOOD BACKWALL - EXISTING ROCK CRIB
EXTEND HEIGHT OF CUV DOWN EXISTING ROCK CRIB

CLAY WEDGE BEHIND EXISTING ROCK CRIB
CLAY WEDGES BOTH SIDES OF EXISTING SAND CRIBS
REGRADE/REPAIR EXISTING CLAY DIKES

STONE GABIONS ON TOP OF EXISTING STRUCTURES
STONE GABIONS FOR TOE PROTECTION - LAKESIDE
RIPRAP FOR TOE PROTECTION - LAKESIDE

SAND BAGS FOR TOE PROTECTION - LAKESIDE
SAND BAGS ON TOP OF EXISTING ROCK CRIBS

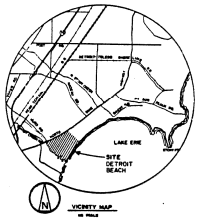

VICINITY MAP
NO SCALE

LEGEND FOR EASEMENTS

PROPERTY LINE
TEMPORARY WORK STORAGE AND ACCESS
25 YEAR DIKE EASEMENT

SCALE 1" = 80'

LOCATION MAP
N.T.S.

NO.	DATE	REVISION	BY
	OCT 1991	"AS BUILTS"	DLA

U. S. ARMY ENGINEER DISTRICT, DETROIT
CORPS OF ENGINEERS
DETROIT, MICHIGAN

ADVANCE MEASURES
DETROIT BEACH
FRENCHTOWN TOWNSHIP
MONROE COUNTY, MICHIGAN
FROM MATCHLINES 1/2

DRAWN BY DYM
TRACED BY
CHECKED BY VPL
REVIEWED RJH
SUBMITTED: CHIEF, DESIGN BRANCH
APPROVAL RECOMMENDED: CHIEF, ENGINEERING DIVISION
DATE 18 JULY 1989
APPROVED: COL., C.E. DISTRICT ENGINEER
DRAWING NUMBER DM12/1139
SHEET 1 OF 7

Black & Veatch Engineers-Architects

THIS PLAN ACCOMPANIES CONTRACT NO. DACW 35-88-C-0058 MODIFICATION NO.

ABRAMS AERIAL SURVEY CORPORATION

DATE OF PHOTOGRAPHY 18 JUNE 1988

A.A.S.C. 20039

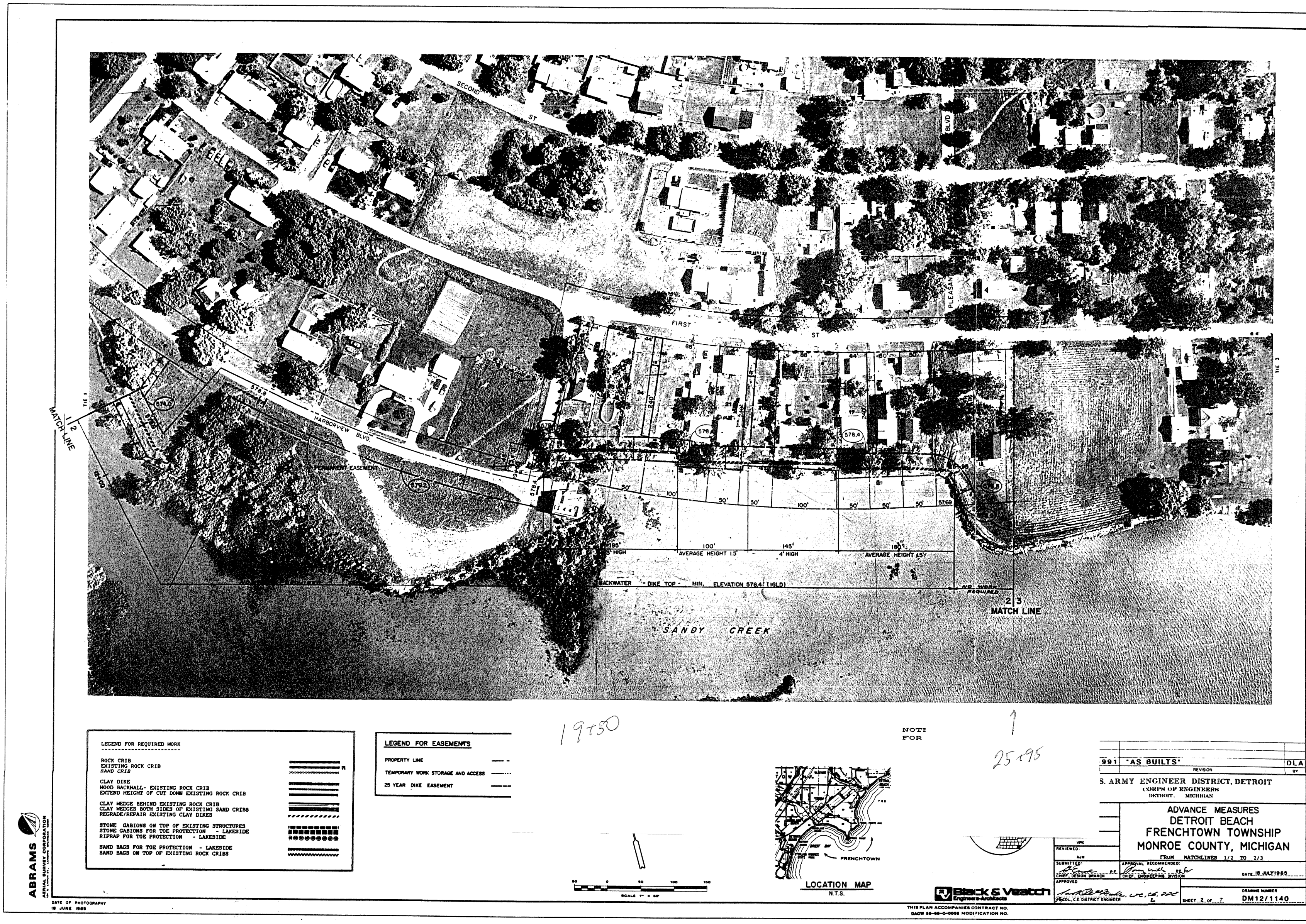
SECOND ST
FIRST ST
PLEASAN
BLVD
HARBORVIEW BLVD.
SANDY CREEK
BACKWATER DIKE TOP - MIN. ELEVATION 578.4 (IGLD)
AVERAGE HEIGHT 1.5'
4' HIGH
AVERAGE HEIGHT 1.5'
MATCH LINE
MATCH LINE
LEGEND FOR REQUIRED WORK
ROCK CRIB
EXISTING ROCK CRIB
SAND CRIB
CLAY DIKE
WOOD BACKWALL- EXISTING ROCK CRIB
EXTEND HEIGHT OF CUT DOWN EXISTING ROCK CRIB
CLAY WEDGE BEHIND EXISTING ROCK CRIB
CLAY WEDGES BOTH SIDES OF EXISTING SAND CRIBS
REGRADE/REPAIR EXISTING CLAY DIKES
STONE GABIONS ON TOP OF EXISTING STRUCTURES
STONE GABIONS FOR TOE PROTECTION - LAKESIDE
RIPRAP FOR TOE PROTECTION - LAKESIDE
SAND BAGS FOR TOE PROTECTION - LAKESIDE
SAND BAGS ON TOP OF EXISTING ROCK CRIBS
LEGEND FOR EASEMENTS
PROPERTY LINE
TEMPORARY WORK STORAGE AND ACCESS
25 YEAR DIKE EASEMENT
19+50
25+95
LOCATION MAP
N.T.S.
FRENCHTOWN
"AS BUILTS"
S. ARMY ENGINEER DISTRICT, DETROIT
CORPS OF ENGINEERS
DETROIT, MICHIGAN
ADVANCE MEASURES
DETROIT BEACH
FRENCHTOWN TOWNSHIP
MONROE COUNTY, MICHIGAN
FROM MATCHLINES 1/2 TO 2/3
DATE 18 JULY1985
SHEET 2 OF 7
DM12/1140
Black & Veatch
Engineers-Architects
THIS PLAN ACCOMPANIES CONTRACT NO.
ABRAMS
AERIAL SURVEY CORPORATION
DATE OF PHOTOGRAPHY
18 JUNE 1985
A.A.S.C. 20039

LEGEND FOR REQUIRED WORK

ROCK CRIB
EXISTING ROCK CRIB
SAND CRIB

CLAY DIKE
WOOD BULKHEAD - EXISTING ROCK CRIB
EXTEND HEIGHT OF CUT DOWN EXISTING ROCK CRIB

CLAY WEDGE BEHIND EXISTING ROCK CRIB
CLAY WEDGES BOTH SIDES OF EXISTING SAND CRIBS
REGRADE/REPAIR EXISTING CLAY DIKES

STONE GABIONS ON TOP OF EXISTING STRUCTURES
STONE GABIONS FOR TOE PROTECTION - LAKESIDE
RIPRAP FOR TOE PROTECTION - LAKESIDE

SAND BAGS FOR TOE PROTECTION - LAKESIDE
SAND BAGS ON TOP OF EXISTING ROCK CRIBS
FLASHBOARD PLANTER

LEGEND FOR EASEMENTS

PROPERTY LINE
TEMPORARY WORK STORAGE AND ACCESS
25 YEAR DIKE EASEMENT

SCALE 1" = 50'

LOCATION MAP
N.T.S.

NOTES:
FOR NOTES SEE SHEET 1

NO.	DATE	REVISION	BY
1	OCT 1991	"AS BUILTS"	DLA

U.S. ARMY ENGINEER DISTRICT, DETROIT
CORPS OF ENGINEERS
DETROIT, MICHIGAN

ADVANCE MEASURES
DETROIT BEACH
FRENCHTOWN TOWNSHIP
MONROE COUNTY, MICHIGAN
FROM MATCHLINES 2/3 TO 3/4

DRAWN BY: DYM
TRACED BY:
CHECKED BY: VPK
REVIEWED: AJR
SUBMITTED: CHIEF, DESIGN BRANCH
APPROVAL RECOMMENDED: CHIEF, ENGINEERING DIVISION
DATE 18 JULY 1985
APPROVED: COL., CE DETROIT ENGINEER
DRAWING NUMBER DM12/1141
SHEET 3 OF 7

Black & Veatch Engineers-Architects

THIS PLAN ACCOMPANIES CONTRACT NO. DACW 69-86-C-0006 MODIFICATION NO.

ABRAMS AERIAL SURVEY CORPORATION

DATE OF PHOTOGRAPHY 18 JUNE 1985

A.A.S.C. 20039

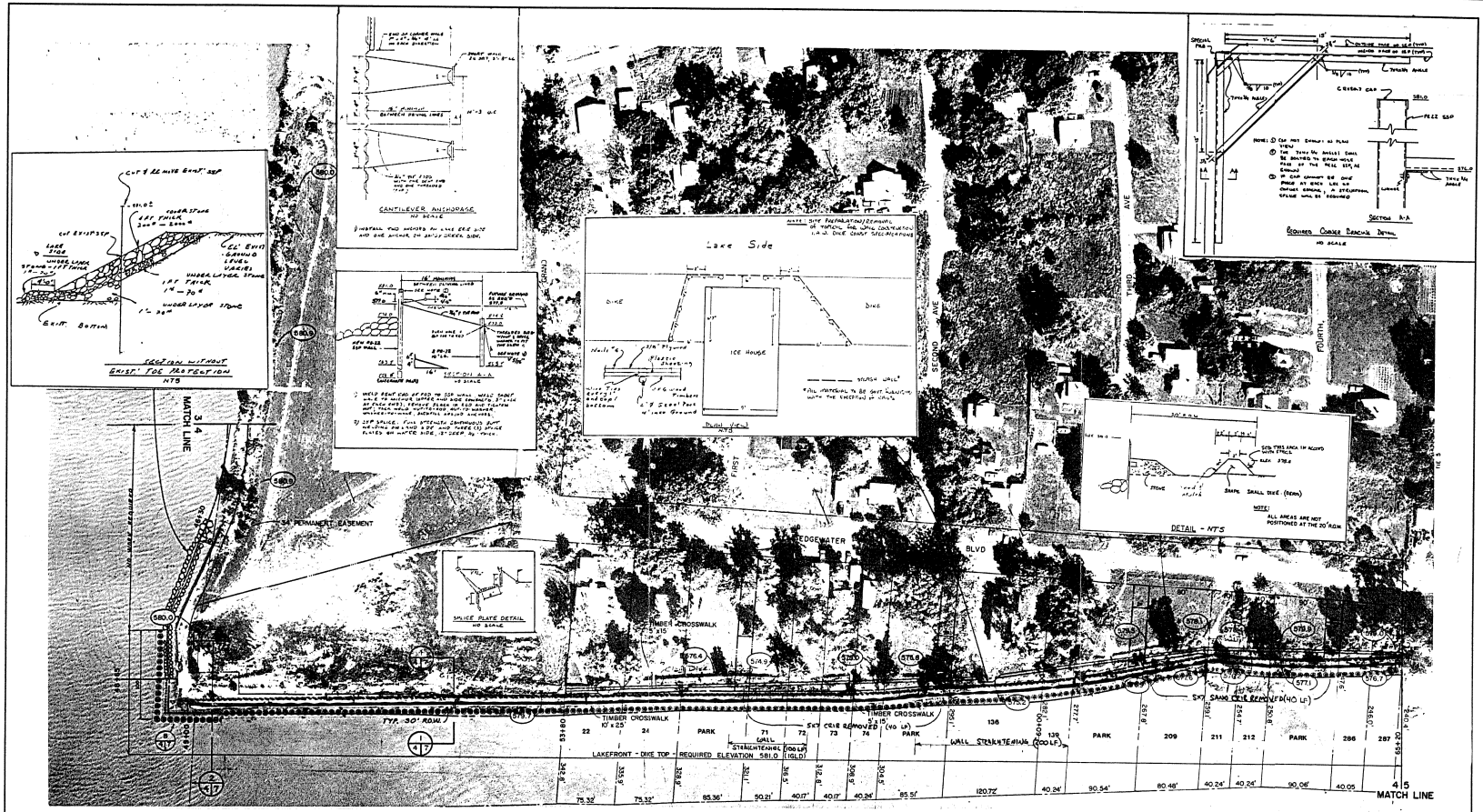

LEGEND FOR REQUIRED WORK

ROCK CRIB
EXISTING ROCK CRIB
SAND CRIB

CLAY DIKE
WOOD BACKWALL- EXISTING R
EXTEND HEIGHT OF CUT (DOWN

CLAY WEDGE BEHIND EXISTIN
CLAY WEDGES BOTH SIDES OF
REGRADE/REPAIR EXISTING C

STONE GABIONS ON TOP OF
STONE GABIONS FOR TOE PRO
RIPRAP FOR TOE PROTECTION - LAKESIDE

SAND BAGS FOR TOE PROTECTION - LAKESIDE
SAND BAGS ON TOP OF EXISTING ROCK CRIBS

49 25

LEGEND FOR EASEMENTS

PROPERTY LINE
TEMPORARY WORK STORAGE AND ACCESS
25 YEAR DIKE EASEMENT

LEGEND FOR REQUIRED WORK

WELD DEFLECTOR P. TYE
FILL
NEW SHEET PILES

SCALE 1" = 50'

NOTES:
FOR NOTES SEE SHEET 1

LOCATION MAP
N.T.S.

FRENCHTOWN

ABRAMS AERIAL SURVEY CORPORATION

DATE OF PHOTOGRAPHY
16 JUNE 1985

Bleick & Veatch Engineers-Architects

THIS PLAN ACCOMPANIES CONTRACT NO.
DACW 35-86-C-0068 MODIFICATION NO.

NO.	DATE	REVISION	BY
1	OCT 1991	"AS BUILTS"	DLA

U. S. ARMY ENGINEER DISTRICT, DETROIT
CORPS OF ENGINEERS
DETROIT, MICHIGAN

DRAWN BY DYM
TRACED BY
CHECKED BY VPK
REVIEWED AJR
SUBMITTED
CHIEF, DESIGN BRANCH
APPROVED
CHIEF, ENGINEERING DIVISION

ADVANCE MEASURES
DETROIT BEACH
FRENCHTOWN TOWNSHIP
MONROE COUNTY, MICHIGAN
FROM MATCHLINES 1/4 TO 1/5

APPROVAL RECOMMENDED:
DATE 18 JULY 1985
APPROVED:
ASST. C.E. DISTRICT ENGINEER

SHEET 4 OF 7
DRAWING NUMBER DM12/1142

A.A.S.C. 20039

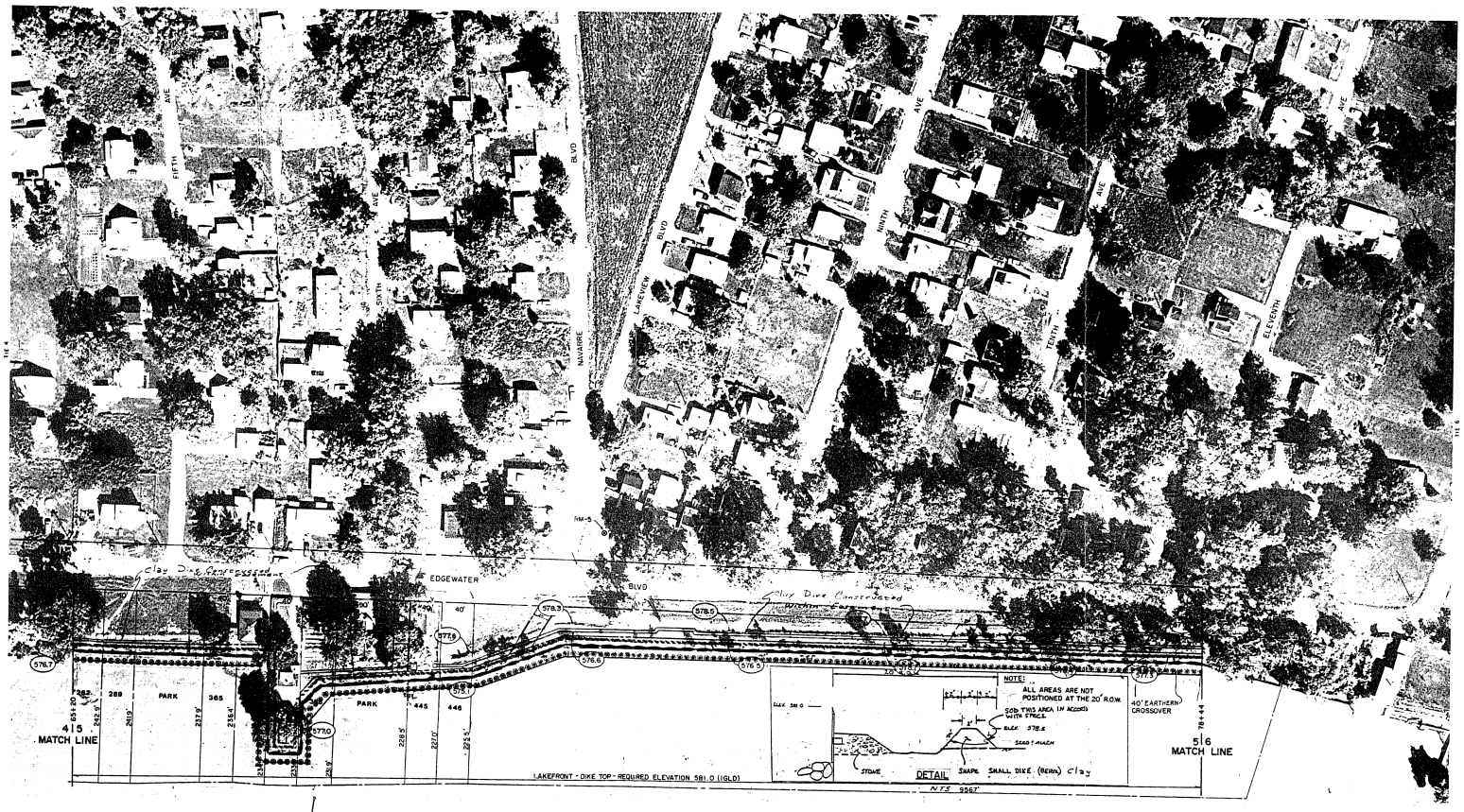

68+20

LEGEND FOR REQUIRED WORK

ROCK CRIB
EXISTING ROCK CRIB
SAND CRIB

CLAY DIKE
NO. 2 BACKWALL- EXISTING ROCK CRIB
TOP HEIGHT OF CUT DOWN EXISTING ROCK CRIB

CLAY WEDGE BEHIND EXISTING ROCK CRIB
CLAY WEDGES BOTH SIDES OF EXISTING SAND CRIBS
REGRADE/REPAIR EXISTING CLAY DIKES

STONE GABIONS ON TOP OF CRIBS
STONE GABIONS FOR TOE PROTECTION - LAKESIDE
RIPRAP FOR TOE PROTECTION - LAKESIDE

SAND BAGS FOR TOE PROTECTION - LAKESIDE
SAND BAGS ON TOP OF EXISTING ROCK CRIBS
SAND BAGS FOR RAMP CLOSURE

ASEMENTS

TORAGE AND ACCESS
EMENT

QUIRED WORK

WELD DEFLECTOR PLATE
FILL
NEW SHEET PILES

NOTES:
FOR NOTES SEE SHEET 1

RMS -- ELEVATION 575.50 (IGLD)
PAILROAD SPIKE IN 24-INCH TREE ON EDGEWATER BOULEVARD ACROSS FROM HOUSE NO. 2403

LOCATION MAP
N.T.S.

FRENCHTOWN

SCALE 1" = 50'

DATE OF PHOTOGRAPHY
19 JUNE 1985

ABRAMS AERIAL SURVEY CORPORATION

Black & Veatch Engineers-Architects

THIS PLAN ACCOMPANIES CONTRACT NO. DACW-25-85-C-0062 MODIFICATION NO.

NO.	DATE	REVISION	BY
	OCT 1991	"AS BUILTS"	DLA

U. S. ARMY ENGINEER DISTRICT, DETROIT
CORPS OF ENGINEERS
DETROIT, MICHIGAN

DRAWN BY DYM
TRACED BY
CHECKED BY VPN
REVIEWED: AJM
SUBMITTED: CHIEF, DESIGN BRANCH
APPROVED: COL., C.E. DISTRICT ENGINEER

ADVANCE MEASURES
DETROIT BEACH
FRENCHTOWN TOWNSHIP
MONROE COUNTY, MICHIGAN
SHOW MATCHLINES 4/5 TO 5/6

APPROVAL RECOMMENDED: CHIEF, ENGINEERING DIVISION
DATE 18 JULY 1985
SHEET 5 OF 7
DRAWING NUMBER DM12/1143

A.A.S.C. 20039

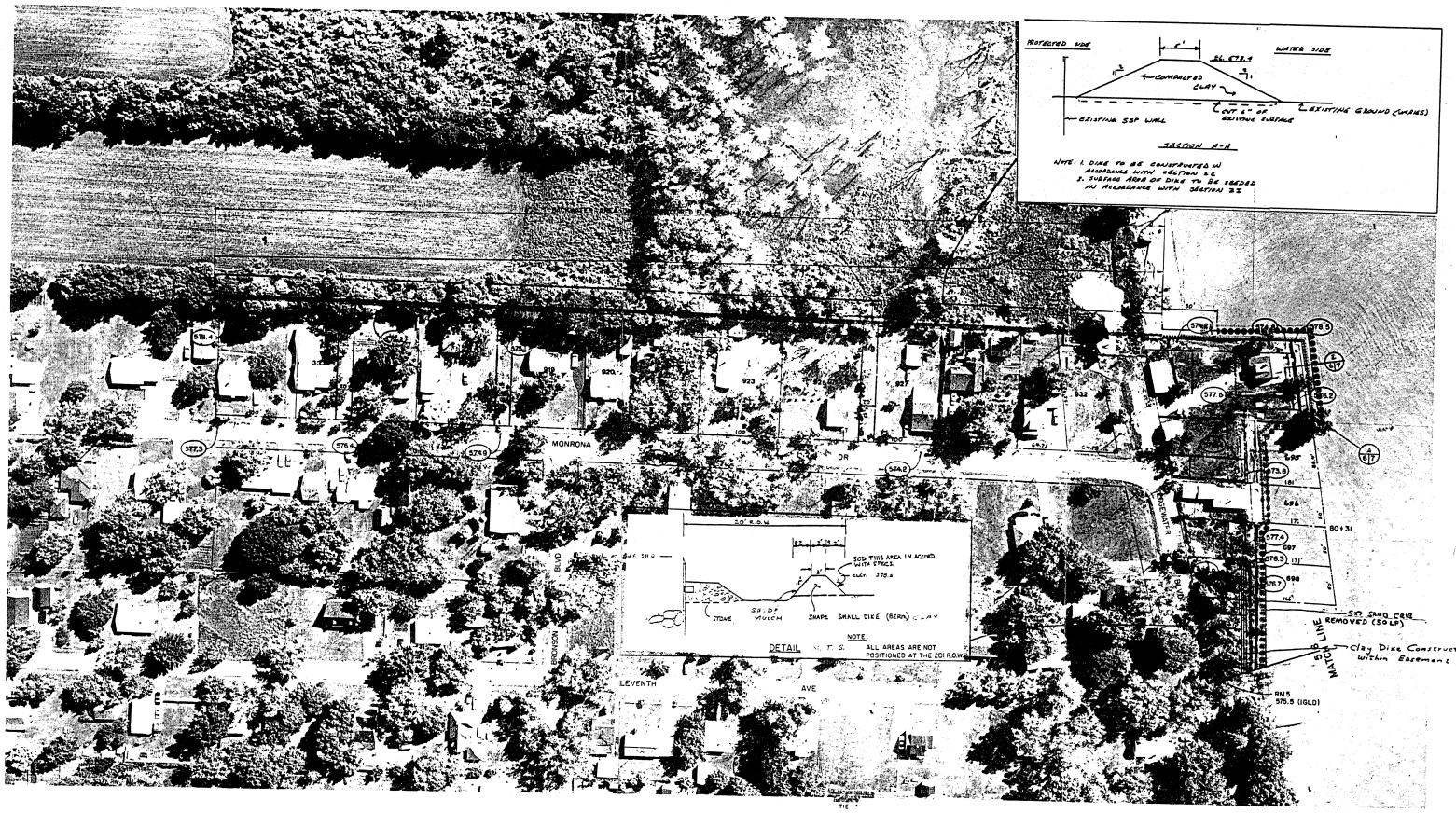

LEGEND FOR REQUIRED WORK

ROCK CRIB
EXISTING ROCK CRIB
SAND CRIB

CLAY DIKE
WOOD BACKWALL- EXISTING ROCK CRIB
EXTEND HEIGHT OF CUT DOWN EXISTING ROCK CRIB

CLAY WEDGE BEHIND EXISTING ROCK CRIB
CLAY WEDGES BOTH SIDES OF EXISTING SAND CRIBS
REGRADE/REPAIR EXISTING CLAY DIKES

STONE GABIONS ON TOP OF EXISTING STRUCTURES
STONE GABIONS FOT TOE PROTECTION - LAKESIDE
RIPRAP FOR TOE PROTECTION - LAKESIDE

SAND BAGS FOR TOE PROTECTION - LAKESIDE
SAND BAGS ON TOP OF EXISTING ROCK CRIBS

LEGEND FOR EASEMENTS

PROPERTY LINE
TEMPORARY WORK STORAGE AND ACCESS
25 YEAR DIKE EASEMENT

LEGEND FOR REQUIRED WORK

WELD DEFLECTOR PLATE
FILL
NEW SHEET PILES

SCALE 1" = 80'

LOCATION MAP
N.T.S

FRENCHTOWN

NOTES:
FOR NOTES SEE SHEET 4

NO.	DATE	REVISION	BY
1	OCT 1991	"AS BUILTS"	DLA

U. S. ARMY ENGINEER DISTRICT, DETROIT
CORPS OF ENGINEERS
DETROIT, MICHIGAN

ADVANCE MEASURES
DETROIT BEACH
FRENCHTOWN TOWNSHIP
MONROE COUNTY, MICHIGAN

FROM RAMSTEIN 5/6

DRAWN BY DYM
TRACED BY
CHECKED BY
REVIEWED VPK
AJR
SUBMITTED: CHIEF DESIGN BRANCH
APPROVAL RECOMMENDED: CHIEF ENGINEERING DIVISION
DATE 18 JULY 1989
APPROVED: LT. COL. CE DISTRICT ENGINEER
SHEET 5 OF 7
DRAWING NUMBER DM12/1144

Black & Veatch Engineers-Architects

THIS PLAN ACCOMPANIES CONTRACT NO. DACW-69-88-C-0008 MODIFICATION NO.

DATE OF PHOTOGRAPHY 18 JUNE 1988

ABRAMS AERIAL SURVEYS, CORPORATION

A.A.S.C. 20039

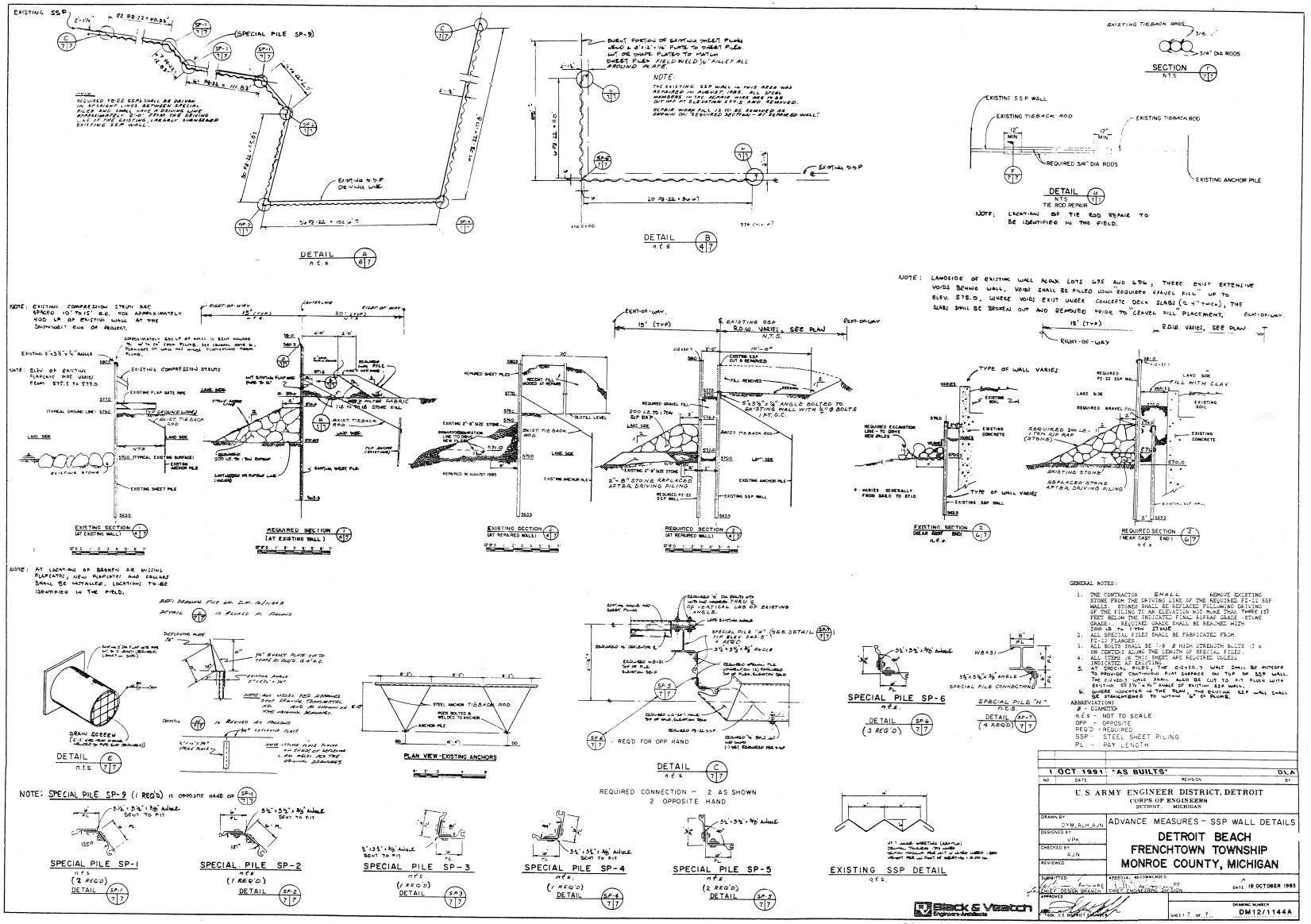

GENERAL NOTES:

1. THE CONTRACTOR SHALL REMOVE EXISTING STONE FROM THE DRIVING LINE OF THE REQUIRED PZ-22 SSP WALLS. STONES SHALL BE REPLACED FOLLOWING DRIVING OF THE PILING TO AN ELEVATION NOT MORE THAN THREE (3) FEET BELOW THE INDICATED FINAL RIPRAP GRADE. STONE GRADE REQUIRED GRADE SHALL BE REACHED WITH 200 LB. TO 1 TON STONE.
2. ALL SPECIAL PILES SHALL BE FABRICATED FROM PZ-22 FLANGES.
3. ALL BOLTS SHALL BE 7/8" Ø HIGH STRENGTH BOLTS 12" C TO CENTERS ALONG THE LENGTH OF SPECIAL PILES.
4. ALL ITEMS ON THIS SHEET ARE REQUIRED UNLESS INDICATED AS EXISTING.
5. AT SPECIAL PILES, THE C12x20.7 WALE SHALL BE MITERED TO PROVIDE CONTINUOUS FLAT SURFACE ON TOP OF SSP WALL. THE C12x20.7 WALE SHALL ALSO BE CUT TO FIT FLUSH WITH EXISTING 5"x3½"x½" ANGLE OF EXISTING SSP WALL.
6. WHERE INDICATED ON THE PLAN, THE EXISTING SSP WALL SHALL BE STRAIGHTENED TO WITHIN 6" OF PLUMB.

ABBREVIATIONS:
Ø - DIAMETER
n.t.s - NOT TO SCALE
OPP - OPPOSITE
REQ'D - REQUIRED
SSP - STEEL SHEET PILING
PL - PAY LENGTH

NO	DATE	REVISION	BY
1	OCT 1991	"AS BUILTS"	DLA

U.S. ARMY ENGINEER DISTRICT, DETROIT
CORPS OF ENGINEERS
DETROIT, MICHIGAN

DRAWN BY: DYM, ALH, JJN
DESIGNED BY: VPK
CHECKED BY: AJN
REVIEWED:
SUBMITTED: CHIEF, DESIGN BRANCH
APPROVED: COL, CE DISTRICT ENGINEER

ADVANCE MEASURES - SSP WALL DETAILS

DETROIT BEACH
FRENCHTOWN TOWNSHIP
MONROE COUNTY, MICHIGAN

DATE: 18 OCTOBER 1985
SHEET 7 OF 7
DRAWING NUMBER: DM12/11144A

Black & Veatch Engineers-Architects

THIS PLAN ACCOMPANIES CONTRACT NO. DACW-25-85-C-0008 MODIFICATION NO.