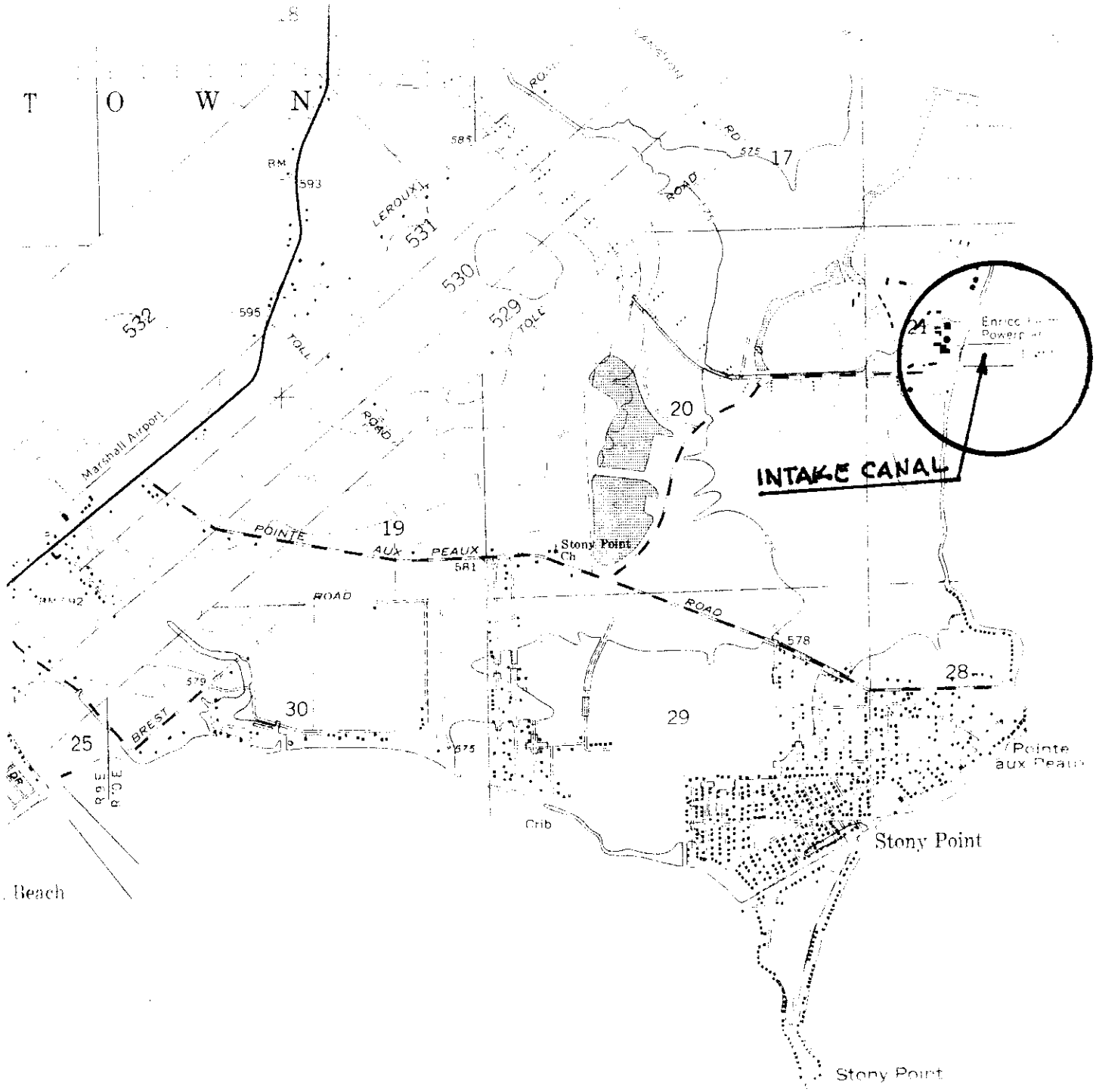

LOCATION MAP

NUMBER: 88-001-040-8/04-58-9
FERMI INTAKE CANAL ANNUAL DREDGE
BY: Detroit Edison
Lake Erie, Frenchtown Twp
MONROE County, MICHIGAN
SHEET: 1 OF 5

PROPOSED INTAKE CANAL
MAINTENANCE DREDGING
Applicant: Detroit Edison
Township: Frenchtown Township
County: Monroe County
Date: 2/10/04

PLAN VIEW

NUMBER: 88-001-040-8/04-58-9
FERMI INTAKE CANAL ANNUAL DREDGE
BY: Detroit Edison
Lake Erie, Frenchtown Twp
MONROE County, MICHIGAN
SHEET: 2 OF 5

PROPOSED INTAKE CANAL
MAINTENANCE DREDGING
Applicant: Detroit Edison
Township: Frenchtown Township
County: Monroe County
Date: 2/10/04
[redacted]

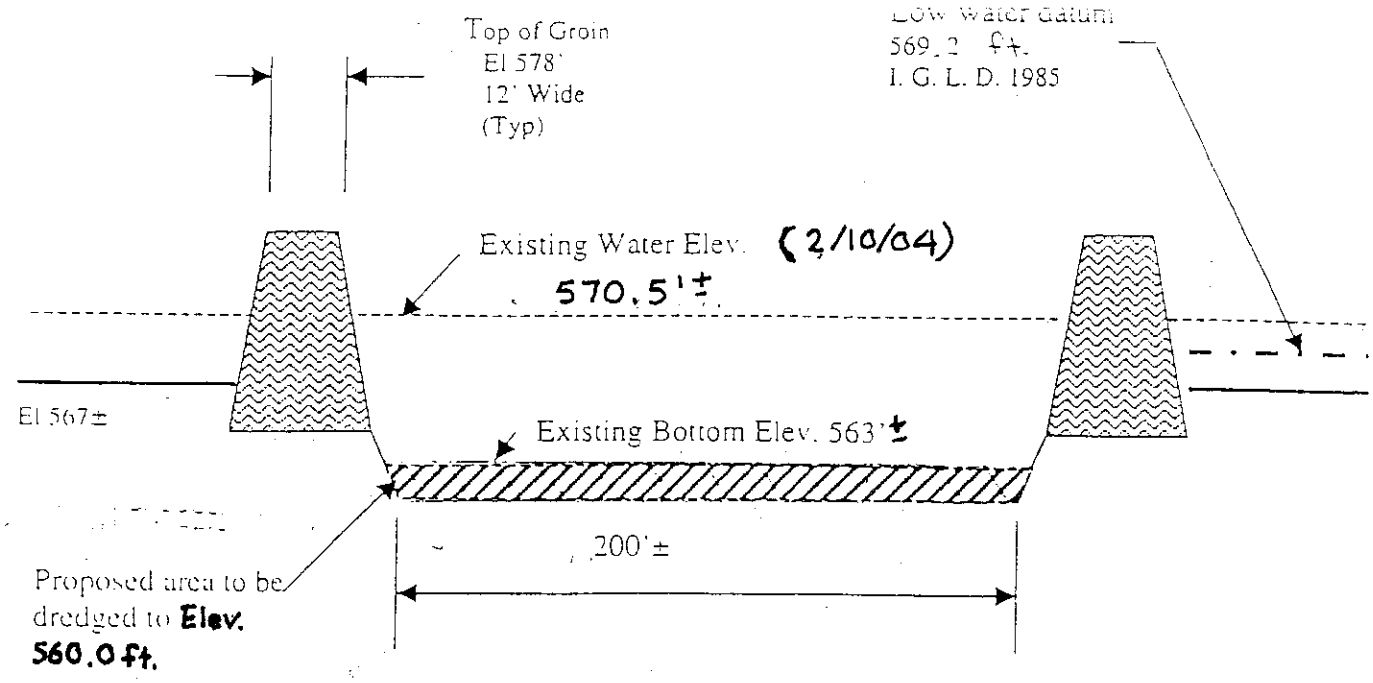

1. Fermi intake canal maintenance
   By: Detroit Edison Company
   Lake Erie, Frenchtown Township
   Monroe County, Michigan
2. All dimensions shown are 1985 I. G. L.D.
3. Total of 25,000± cubic yards of dredged material to be removed by hydraulic dredge and placed in state and federal approved on-site dredge disposal basin. (100,000 Cu. Yds. Capacity)

SECTION

NUMBER: 88-001-040-8/04-58-9
FERMI INTAKE CANAL ANNUAL DREDGE
BY: Detroit Edison
Lake Erie, Frenchtown Twp
MONROE County, MICHIGAN
SHEET: 3 OF 5

PROPOSED INTAKE CANAL MAINTENANCE DREDGING
Applicant: Detroit Edison
Township: Frenchtown Township
County: Monroe County
Date: 2/10/04
[redacted]

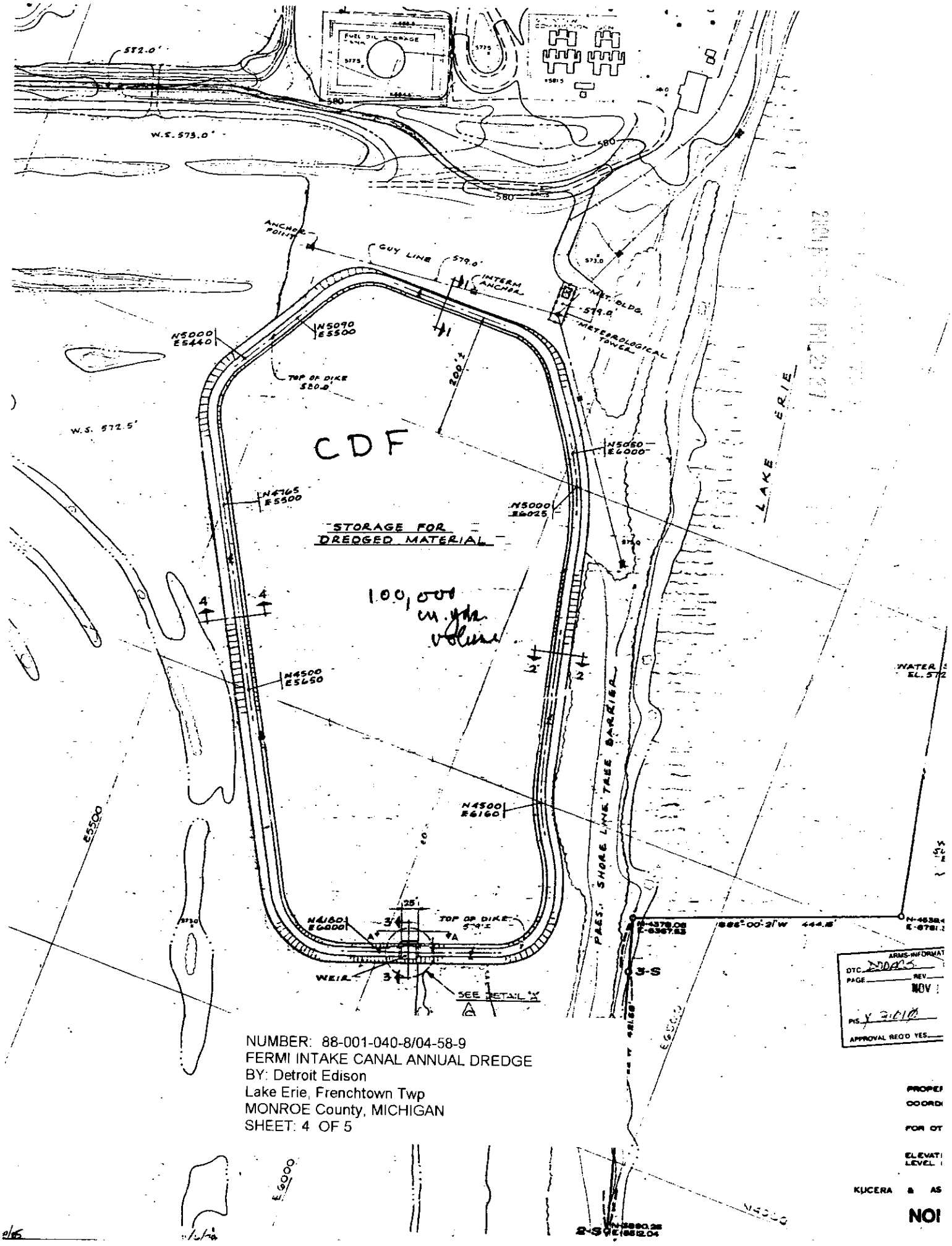

NUMBER: 88-001-040-8/04-58-9
FERMI INTAKE CANAL ANNUAL DREDGE
BY: Detroit Edison
Lake Erie, Frenchtown Twp
MONROE County, MICHIGAN
SHEET: 4 OF 5

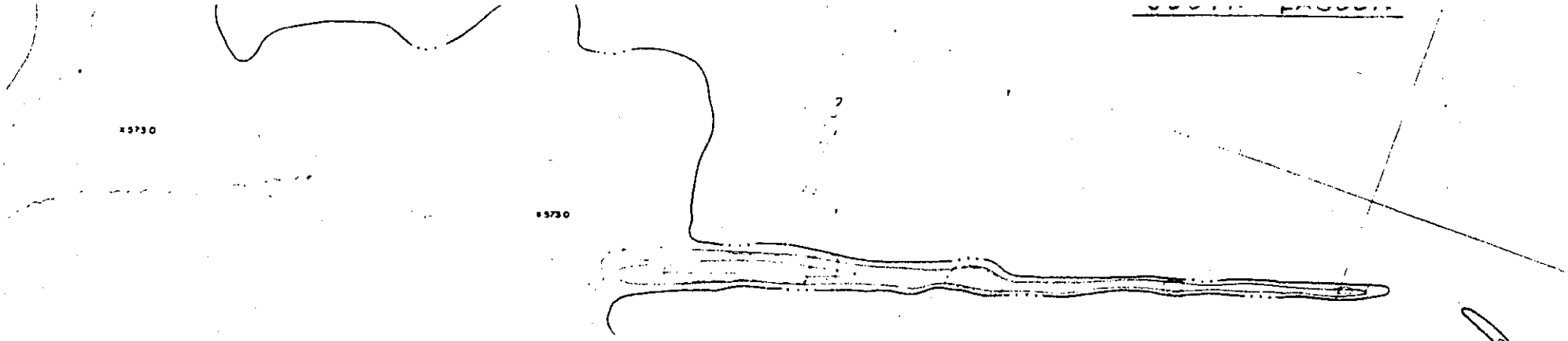

NOTE: SHEET PILING SHALL BE PRODUCED
STATES STEEL DESIGNATED, OR EQUAL
WITH STEEL BRAND OR GRADES OF ASTM-328
AND MINIMUM YIELD POINT OF 39500 P.S.I.

W.S. 572.5

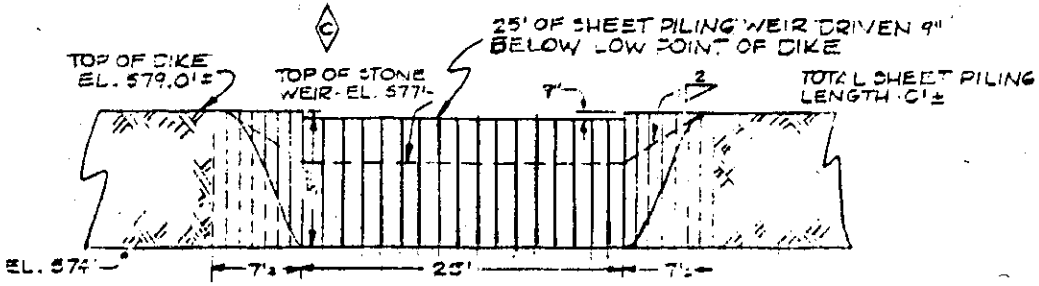

SECTION A-A
HORIZ. SCALE: 1"=10'
VERT. = N.T.S.

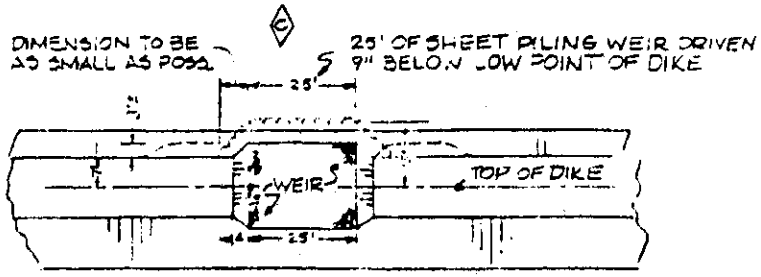

DETAIL "A"
SCALE 1"=30'

I	PROJ. DES.	PROJ. ENG.	PROJ. DIR.	H	PROJ. DES.	PROJ. ENG.	PROJ. DIR.	G	PROJ. DES.	PROJ. ENG.	PROJ. DIR.	F	PROJ. DES.	PROJ. ENG.	PROJ. DIR.	E	PROJ. DES.	PROJ. ENG.	PROJ. DIR.

NUMBER: 88-001-040-8/04-58-9
FERMI INTAKE CANAL ANNUAL DREDGE
BY: Detroit Edison
Lake Erie, Frenchtown Twp
MONROE County, MICHIGAN
SHEET: 5 OF 5