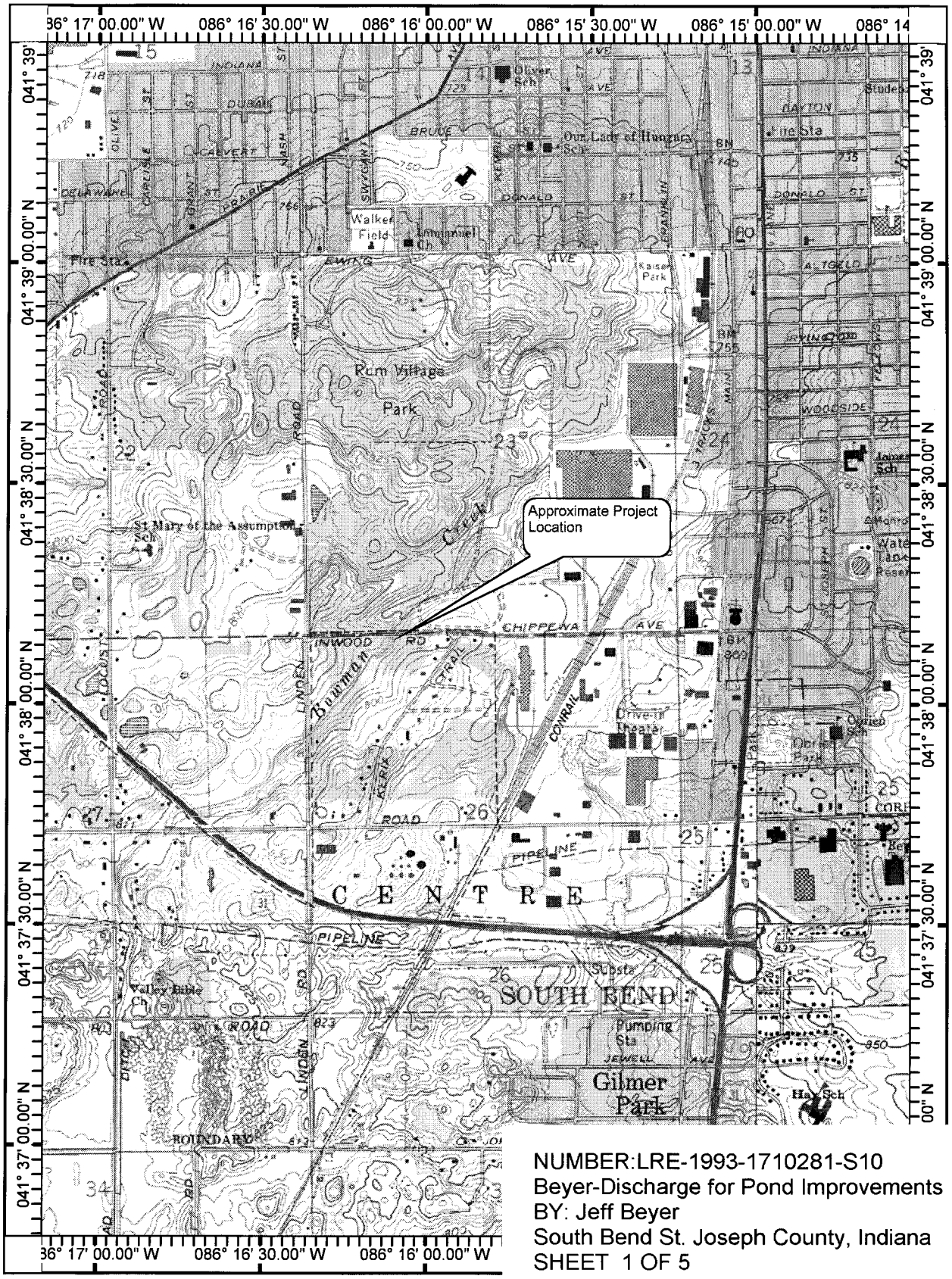

NUMBER:LRE-1993-1710281-S10
Beyer-Discharge for Pond Improvements
BY: Jeff Beyer
South Bend St. Joseph County, Indiana
SHEET 1 OF 5

SCALE 1:24000

0 1000 2000 3000 4000 5000 6000 7000

FEET

NUMBER:LRE-1993-1710281-S10
Beyer-Discharge for Pond Improvements
BY: Jeff Beyer
South Bend St. Joseph County, Indiana
SHEET 2 OF 5

SITE PLAN

20700 CHIPPEWA AVENUE
G B R ESTATES MINOR
LOT #1
FOR
JEFF BEYER
ARMY CORPS FILE #LRE-1993-1710281-S09
IDEM CASE #2010-19333-Q

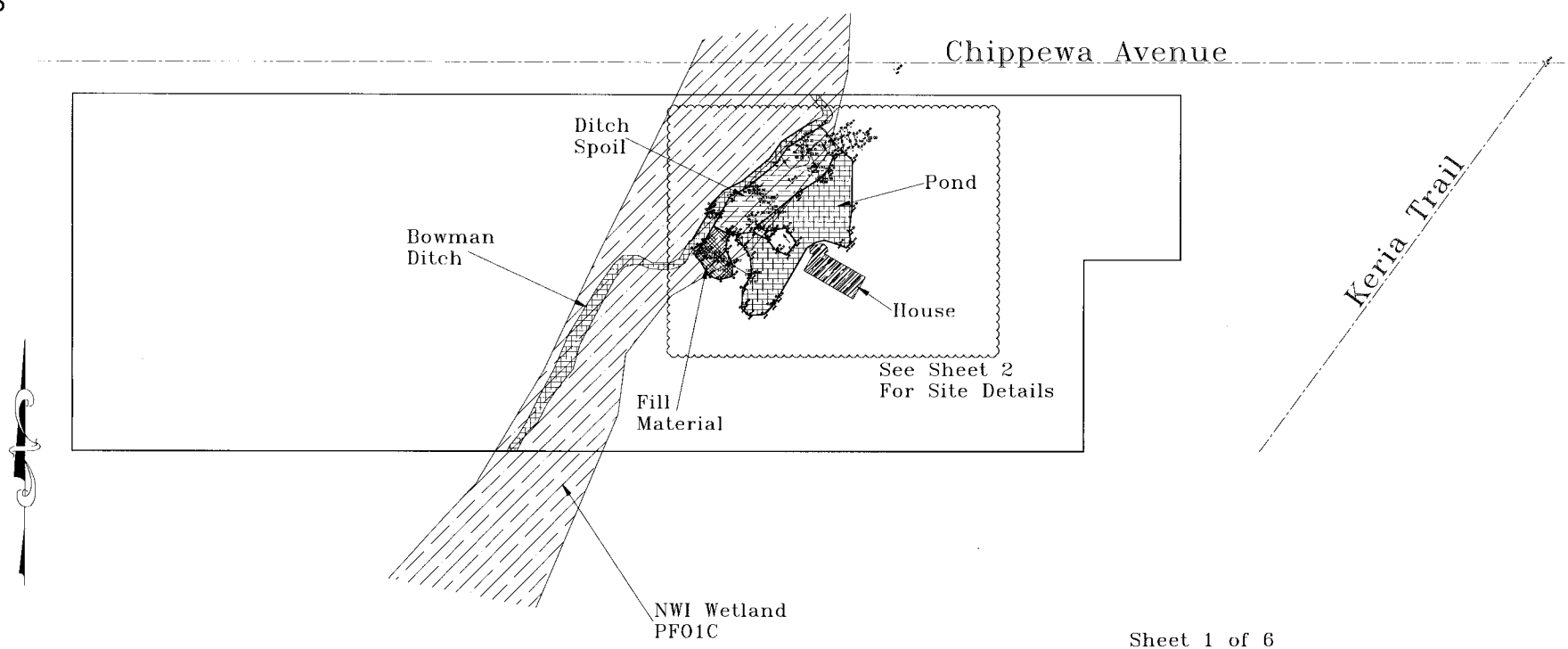

0' 200' 400' 600'

Sheet 1 of 6

Lang, Feeney & Associates, Inc.
715 S. Michigan Street
South Bend, Indiana 46601
Phone (574) 233-1841
Land Surveyors • Soil Scientists

Scale	1" = 200'	Drawn by	TGM
Date	9/14/10	File Name	20700ChippewaAvenueWetland.dwg
Rev.	12/17/10		
Rev.			

NUMBER:LRE-1993-1710281-S10
Beyer-Discharge for Pond Improvements
BY: Jeff Beyer
South Bend St. Joseph County, Indiana
SHEET 5 OF 5

OGRAPHY / CROSS SECTIONS

20700 CHIPPEWA AVENUE
G B R ESTATES MINOR
LOT #1
FOR
JEFF BEYER
ARMY CORPS FILE #LRE-1993-1710281-S09
IDEM CASE #2010-19333-Q

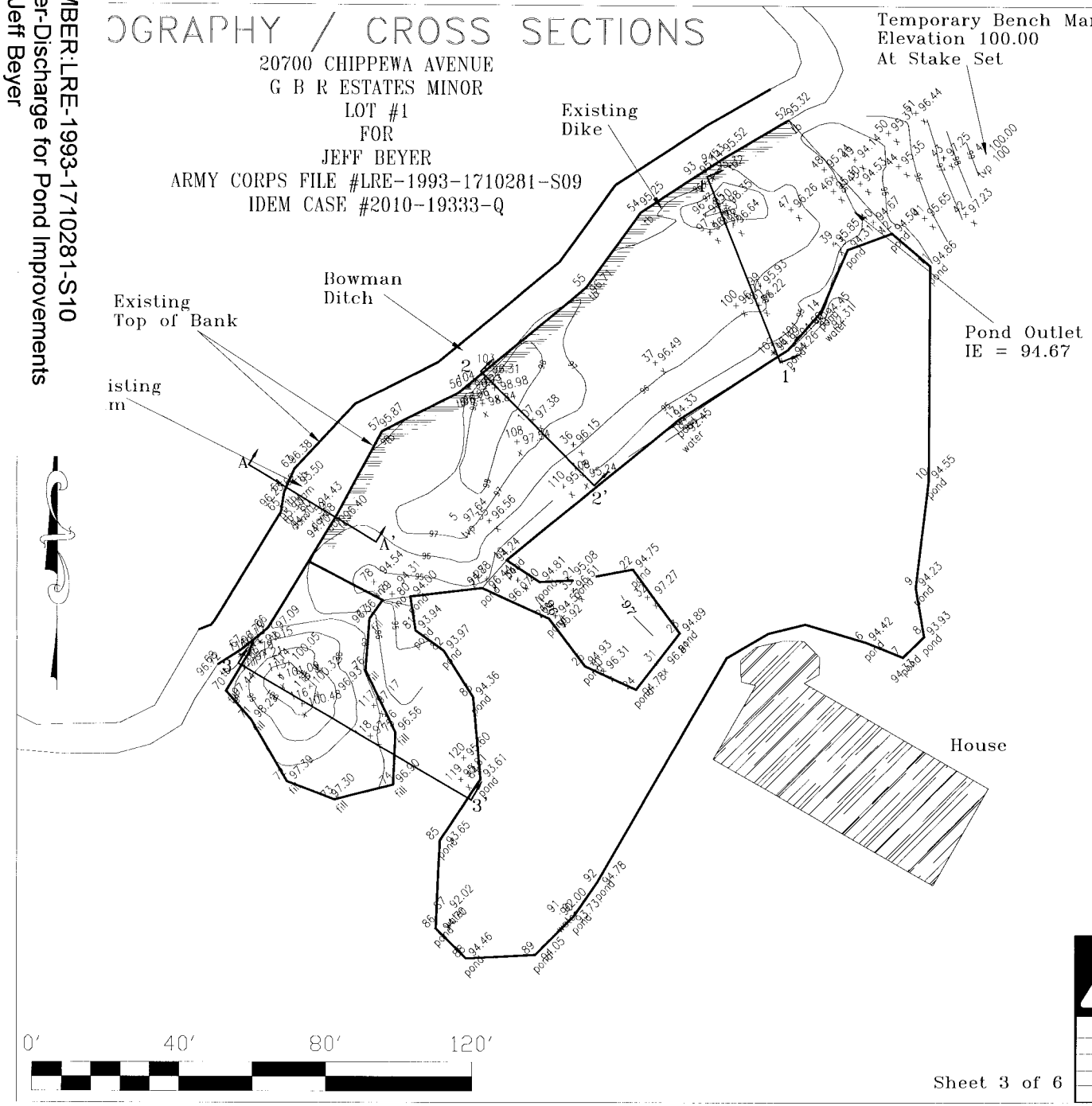

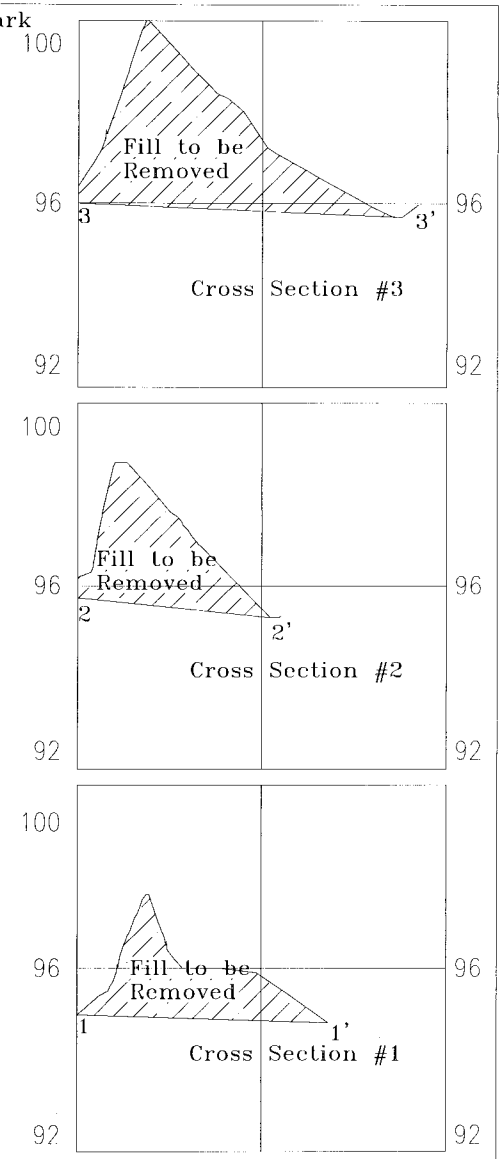

Sheet 3 of 6

Lang, Feeney & Associates, Inc.
715 S. Michigan Street
South Bend, Indiana 46601
Phone (574) 233-1841
Land Surveyors • Soil Scientists

Scale	1" = 40'	Drawn by	TGM
Date	9/14/10	File Name	20700ChippewaAvenueWetland.dwg
Rev.	12/17/10		
Rev.			

SITE PLAN

20700 CHIPPEWA AVENUE
G B R ESTATES MINOR
LOT #1
FOR
JEFF BEYER
ARMY CORPS FILE #LRE-1993-1710281-S09
IDEM CASE #2010-19333-Q

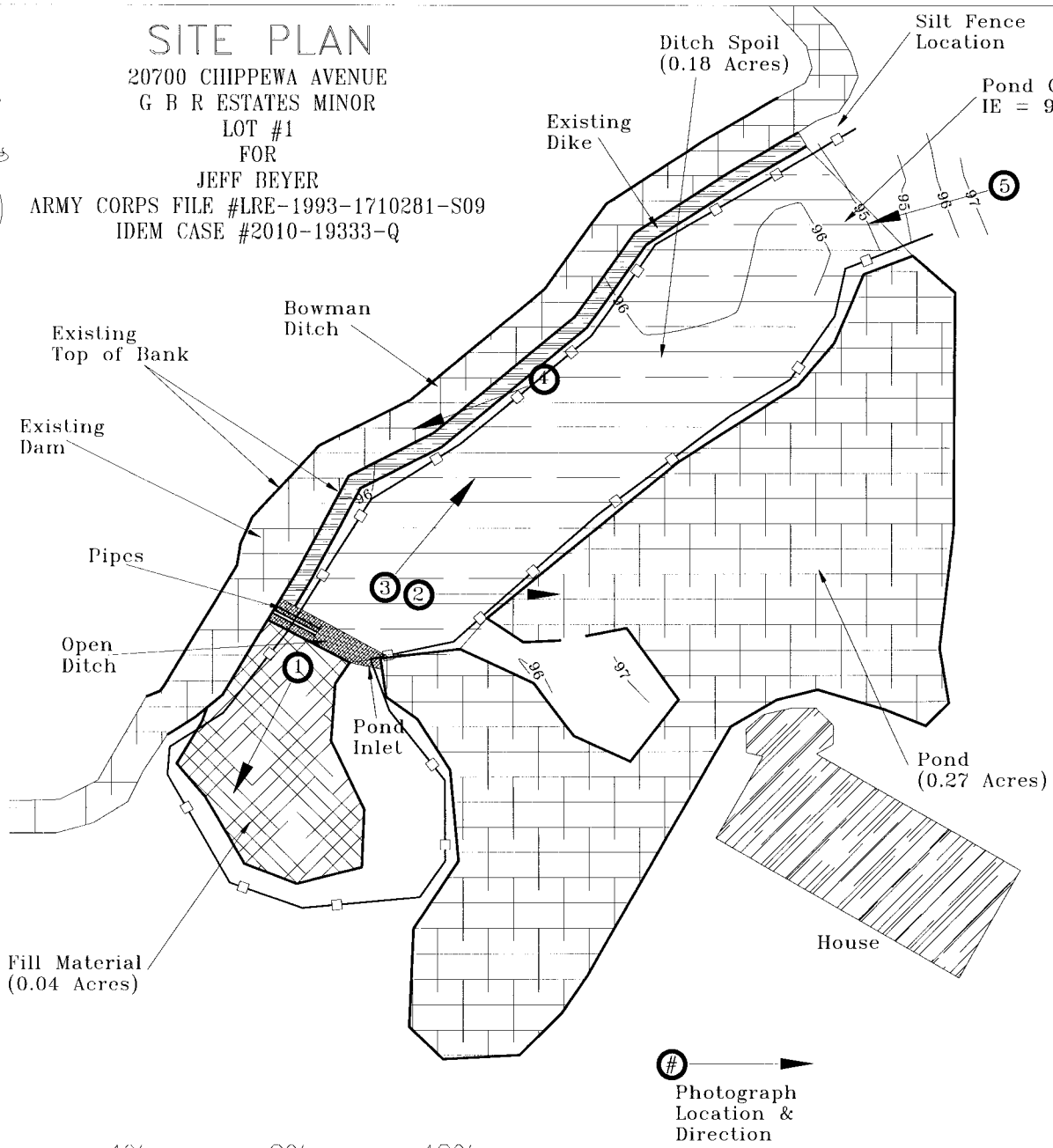

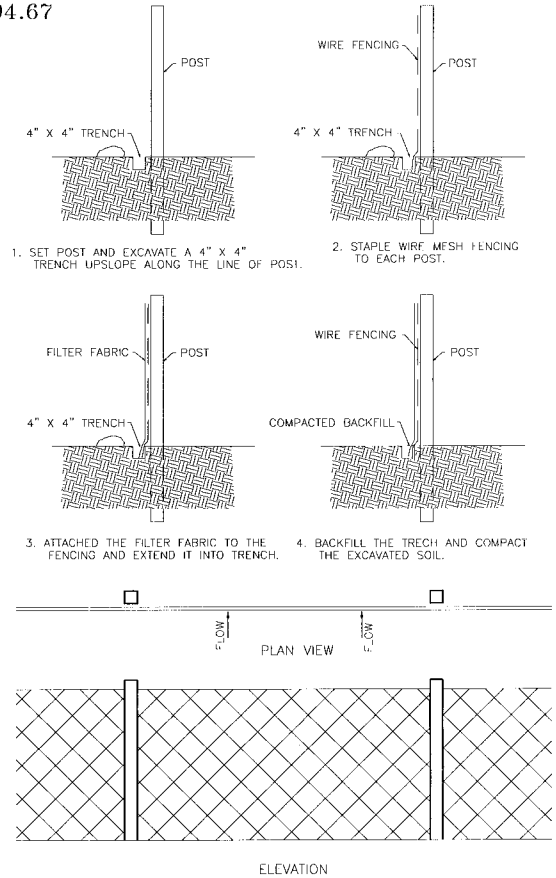

SILT FENCE DETAIL
NO SCALE

NUMBER:LRE-1993-1710281-S10
Beyer-Discharge for Pond Improvements
BY: Jeff Beyer
South Bend St. Joseph County, Indiana
SHEET 3 OF 5

Lang, Feeney & Associates, Inc.
715 S. Michigan Street
South Bend, Indiana 46601
Phone (574) 233-1841
Land Surveyors • Soil Scientists

Scale	1" = 40'	Drawn by	TGM
Date	9/14/10	File Name	20700ChippewaAvenueWetland.dwg
Rev.	12/17/10		
Rev.			

Sheet 2 of 6

NUMBER:LRE-1993-1710281-S10
Beyer-Discharge for Pond Improvements
BY: Jeff Beyer
South Bend St. Joseph County, Indiana
SHEET 4 OF 5

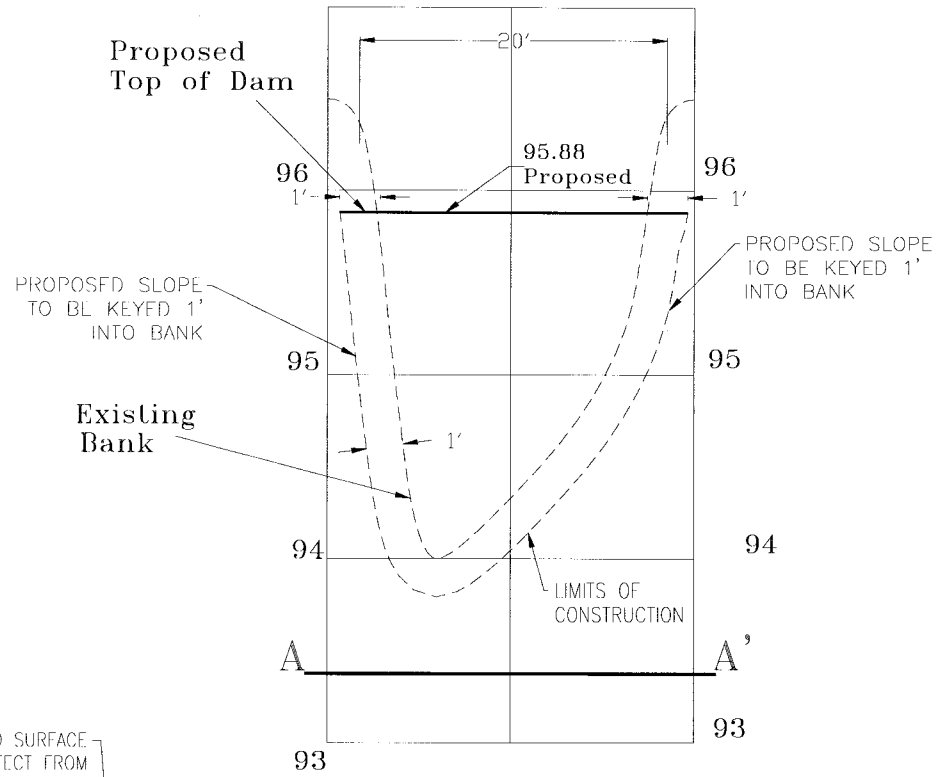

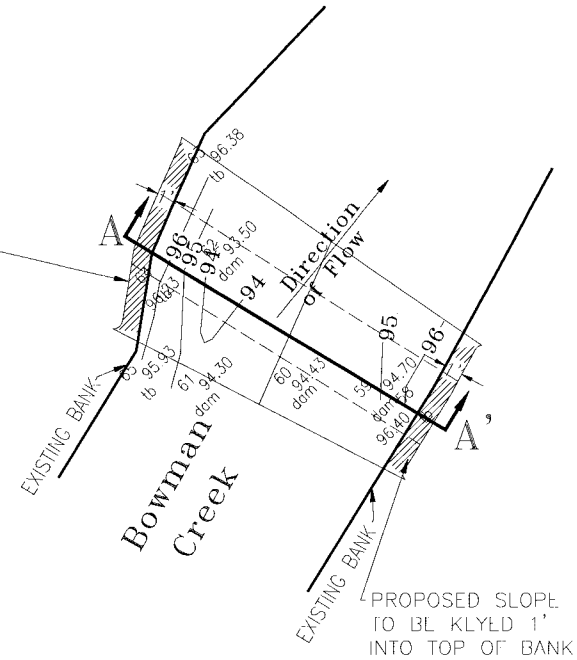

STRUCTURE DETAILS

20700 CHIPPEWA AVENUE
G B R ESTATES MINOR
LOT #1
FOR
JEFF BEYER
ARMY CORPS FILE #LRE-1993-1710281-S09
IDEM CASE #2010-19333-Q

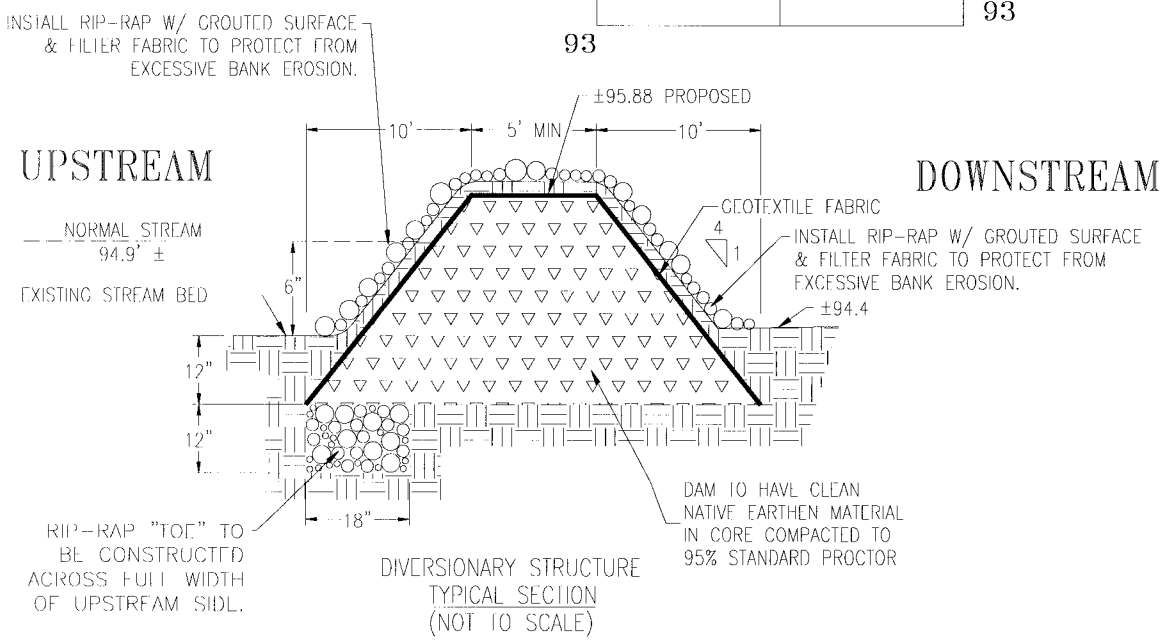

DIVERSIONARY STRUCTURE
TYPICAL SECTION
(NOT TO SCALE)

Sheet 4 of 6

Lang, Feeney & Associates, Inc.
715 S. Michigan Street
South Bend, Indiana 46601
Phone (574) 233-1841
Land Surveyors • Soil Scientists

Scale	1" = 10'	Drawn by	TGM
Date	9/14/10		
Rev.	12/17/10	File Name	
Rev.	1/7/11		20700ChippewaAvenueWetland.dwg