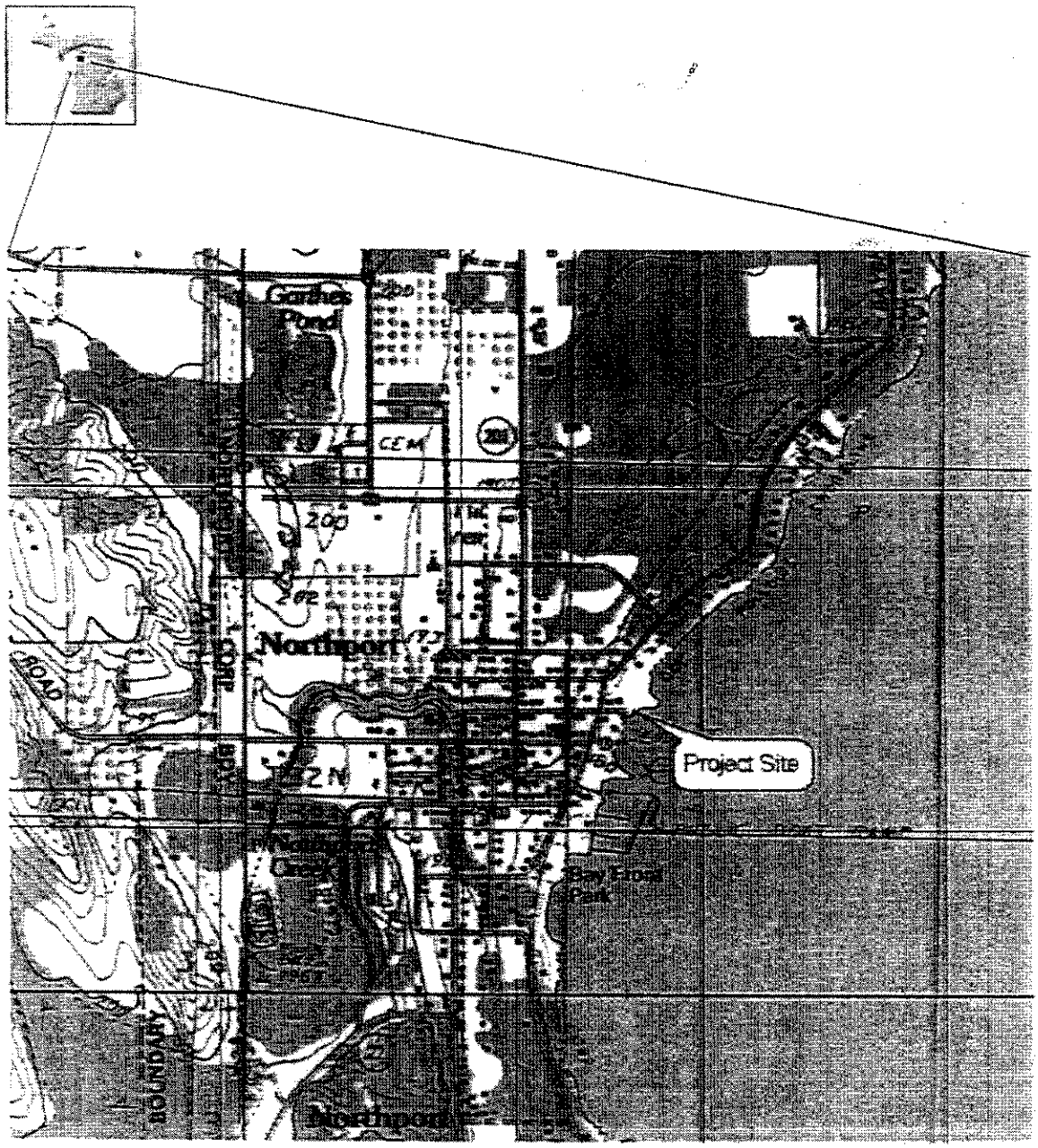

LRE 2007-204-56; Marina Expansion
By: N.M. Investments, LLC
Lake Michigan
Northport, Leelanau County, Michigan
Sheet 1 of 7

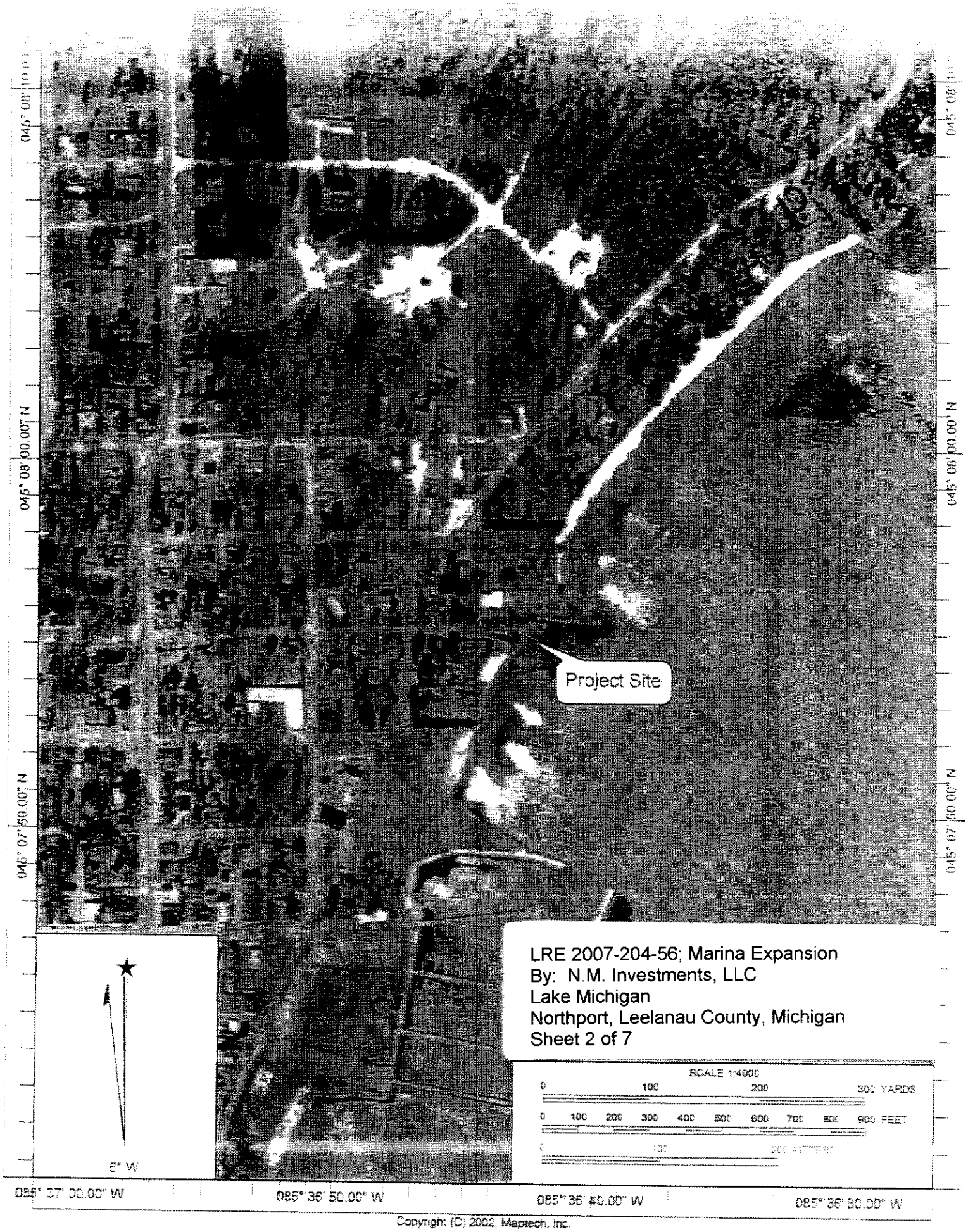

Copyright: (C) 2002, Maptech, Inc.

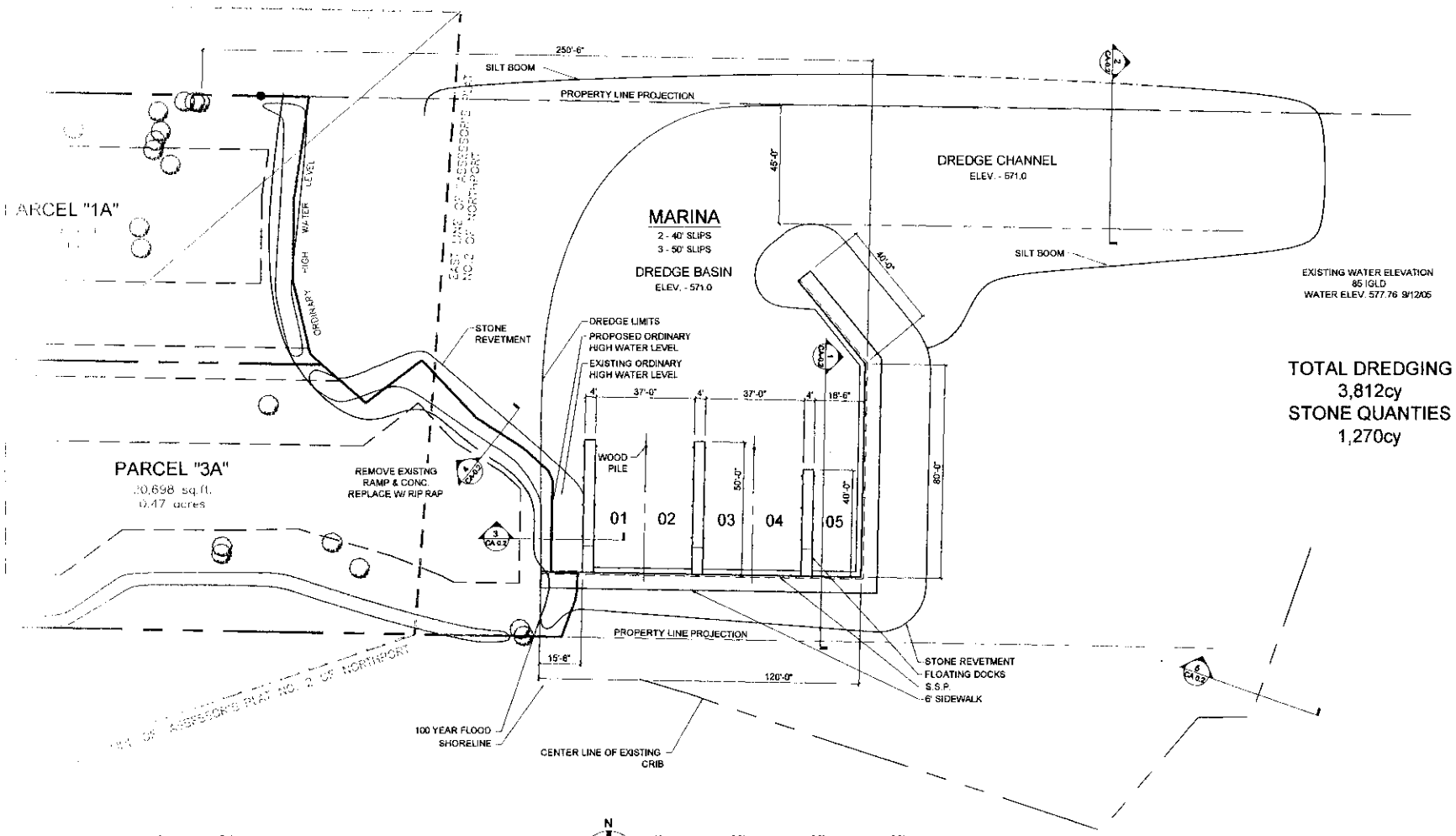

1 CA0.1 Marina Site Plan
1" = 60'-0"

LRE 2007-204-56; Marina Expansion
By: N.M. Investments, LLC
Lake Michigan
Northport, Leelanau County, Michigan
Sheet 3 of 7

MOLON
TEL: 231.943.3929 FAX: 231.943.3954

REV:	DATE:	DRN:	DESCRIPTION:
000	00.00.00	XXX	XXXX

NORTHPORT LANDING
MARINA DESIGN

DRN: SPF
CHD: AM
DATE CREATED: 06.06.07
PROJECT NO: 00.000.000
SHT. CA0.1

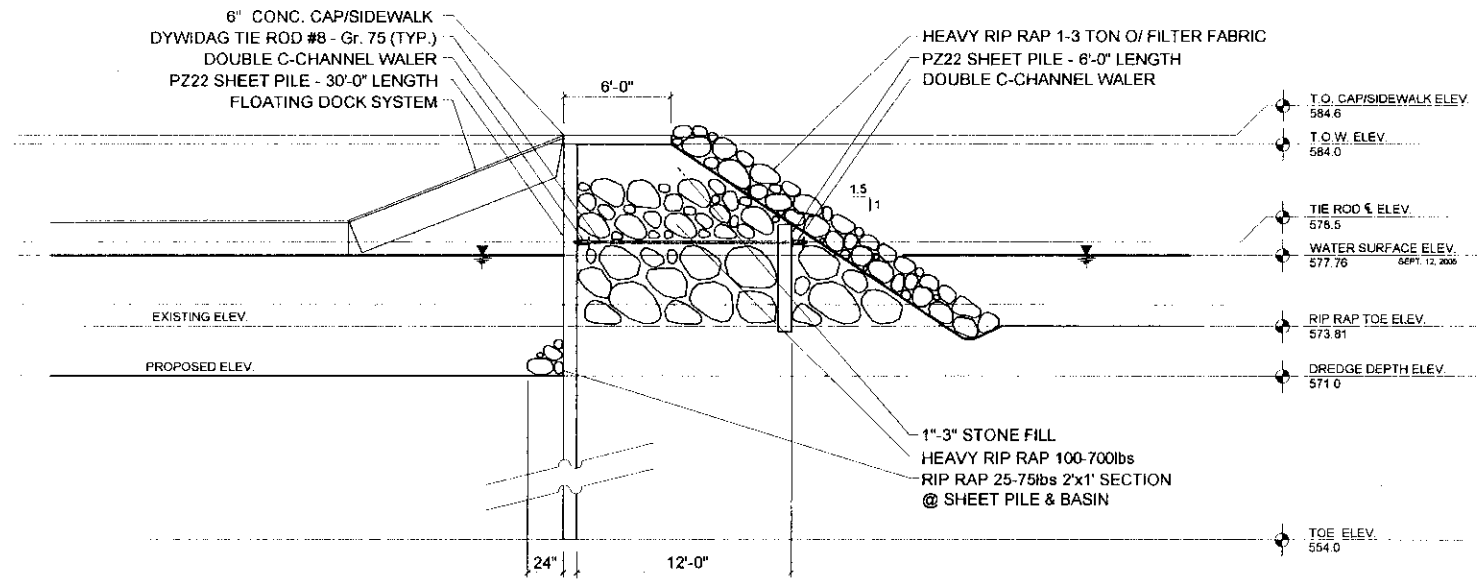

1 CA0.2a Basin & Sheet Pile Section
3/32" = 1'-0"

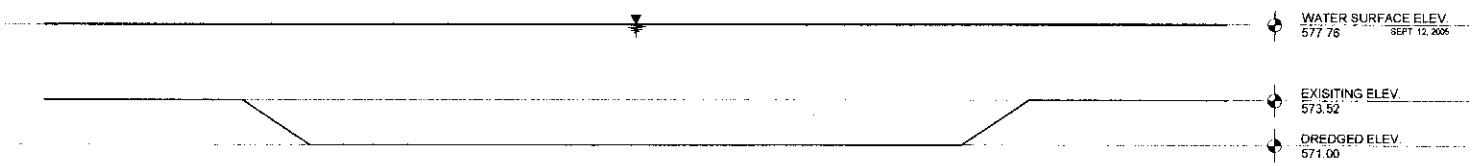

2 CA0.2a Channel Section
3/32" = 1'-0"

LRE 2007-204-56; Marina Expansion
By: N.M. Investments, LLC
Lake Michigan
Northport, Leelanau County, Michigan
Sheet 4 of 7

MOLON
TEL: 231.943.3929 FAX: 231.943.3954

REV:	DATE:	DRN:	DESCRIPTION:
000	00.00.00	XXX	XXXX

NORTHPORT LANDING
MARINA DESIGN

DRN: SPF
CHD: AM
DATE CREATED: 04.20.07
PROJECT NO: 00.000.000
SHT. CA.2a

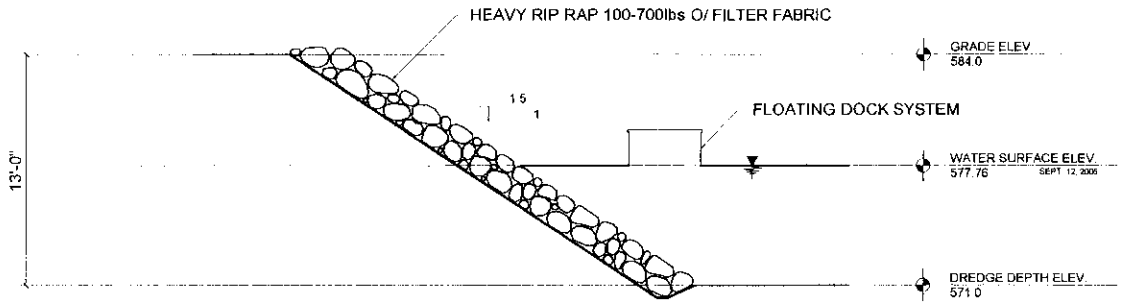

3 CA0.2b **Basin & Shoreline Detail**
3/32" = 1'-0"

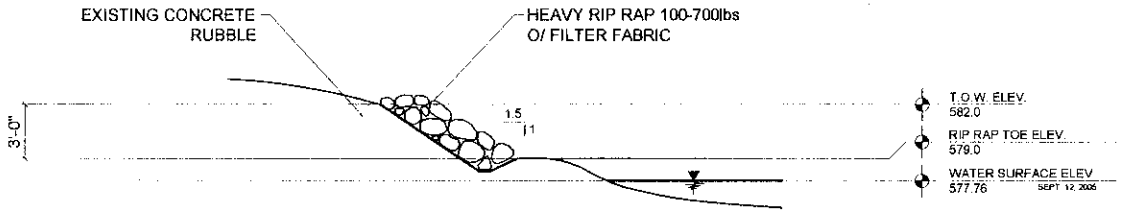

4 CA0.2b **Shoreline Retention**
3/32" = 1'-0"

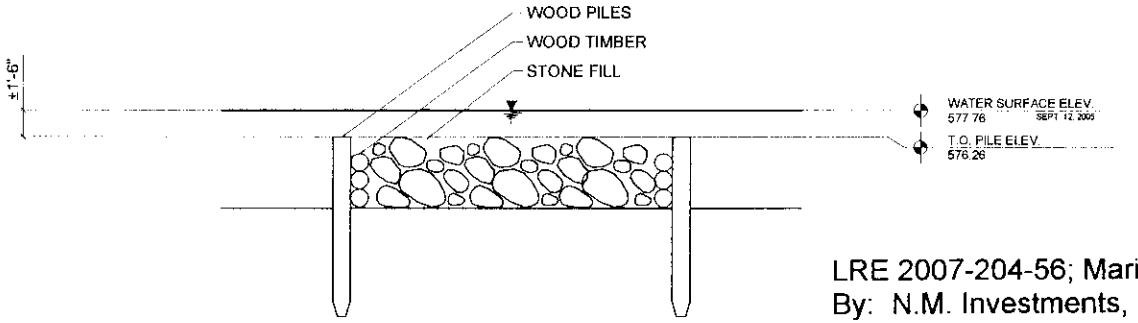

5 CA0.2b **Existing Crib Section**
3/32" = 1'-0"

LRE 2007-204-56; Marina Expansion
By: N.M. Investments, LLC
Lake Michigan
Northport, Leelanau County, Michigan
Sheet 5 of 7

MOLON
TEL: 231.943.3929 FAX: 231.943.3954

REV:	DATE:	DRN:	DESCRIPTION:
000	00.00.00	XXX	XXXX

NORTHPORT LANDING
MARINA DESIGN

DRN: SPF
CHD: AM
DATE CREATED: 06.06.07
PROJECT NO: 00.000.000
SHT. CA.2b

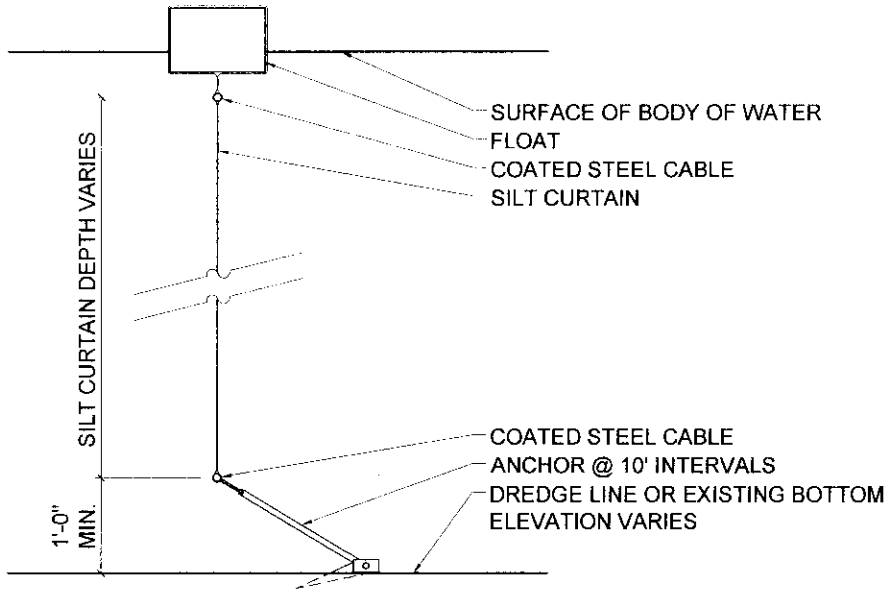

1 / CA0.3 Silt Boom Detail

1/2" = 1'-0"

LRE 2007-204-56; Marina Expansion
By: N.M. Investments, LLC
Lake Michigan
Northport, Leelanau County, Michigan
Sheet 6 of 7

MOLON
TEL: 231.943.3929 FAX: 231.943.3954

REV:	DATE:	DRN:	DESCRIPTION:
000	00.00.00	XXX	XXXX

NORTHPORT LANDING
MARINA DESIGN

DRN: SPF
CHD: AM
DATE CREATED: 06.06.07
PROJECT NO: 00.000.000
SHT. CA0.3

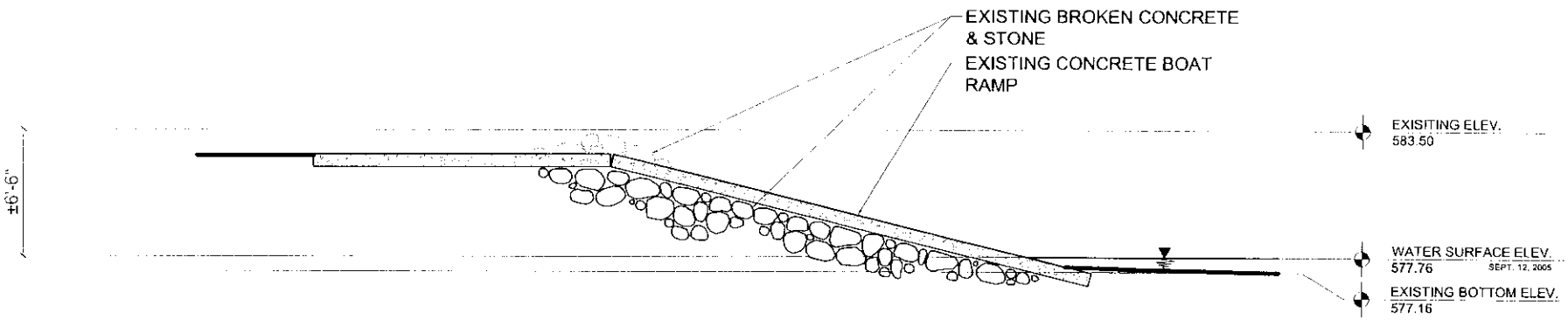

4
CA-0.1

Existing Concrete Ramp Section

1/8" = 1'-0"

LRE 2007-204-56; Marina Expansion
By: N.M. Investments, LLC
Lake Michigan
Northport, Leelanau County, Michigan
Sheet 7 of 7