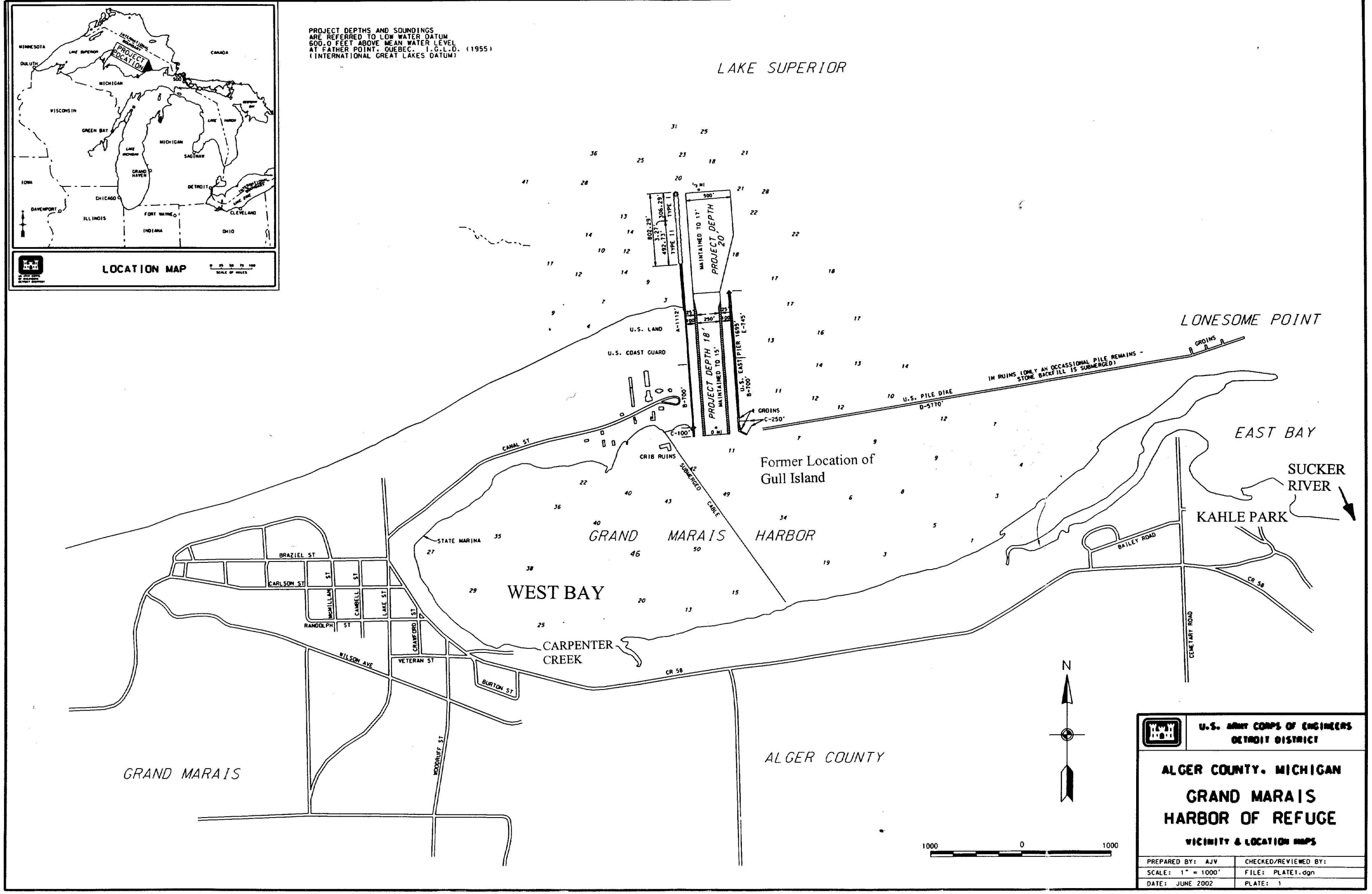
PROJECT DEPTHS AND SOUNDINGS
ARE REFERRED TO LOW WATER DATUM
600.0 FEET ABOVE MEAN WATER LEVEL
AT FATHER POINT, QUEBEC. I.G.L.D. (1955)
(INTERNATIONAL GREAT LAKES DATUM)
LOCATION MAP
MINNESOTA
DULUTH
LAKE SUPERIOR
CANADA
PROJECT LOCATION
MICHIGAN
WISCONSIN
GREEN BAY
LAKE MICHIGAN
SAGINAW
GRAND HAVEN
DETROIT
IOWA
CHICAGO
DAVENPORT
ILLINOIS
FORT WAYNE
INDIANA
CLEVELAND
OHIO
SCALE OF MILES
LAKE SUPERIOR
LONESOME POINT
U.S. LAND
U.S. COAST GUARD
PROJECT DEPTH 20'
MAINTAINED TO 17'
PROJECT DEPTH 18'
MAINTAINED TO 15'
U.S. EAST PIER 1695' E-745'
U.S. PILE DIKE
D-5170'
IN RUINS (ONLY AN OCCASSIONAL PILE REMAINS - STONE BACKFILL IS SUBMERGED)
GROINS
C-250'
B-700'
C-100'
CANAL ST
CRIB RUINS
SUBMERGED CABLE
Former Location of Gull Island
EAST BAY
SUCKER RIVER
KAHLE PARK
BAILEY ROAD
CR 58
CEMETERY ROAD
STATE MARINA
GRAND MARAIS HARBOR
WEST BAY
CARPENTER CREEK
BRAZIEL ST
CARLSON ST
MCMILLAN ST
CAMBELL ST
LAKE ST
RANDOLPH ST
CRAWFORD ST
WILSON AVE
VETERAN ST
BURTON ST
WOODRUFF ST
GRAND MARAIS
ALGER COUNTY
N
1000 0 1000
U.S. ARMY CORPS OF ENGINEERS
DETROIT DISTRICT
ALGER COUNTY, MICHIGAN
GRAND MARAIS
HARBOR OF REFUGE
VICINITY & LOCATION MAPS
PREPARED BY: AJV
CHECKED/REVIEWED BY:
SCALE: 1" = 1000'
FILE: PLATE1.dgn
DATE: JUNE 2002
PLATE: 1

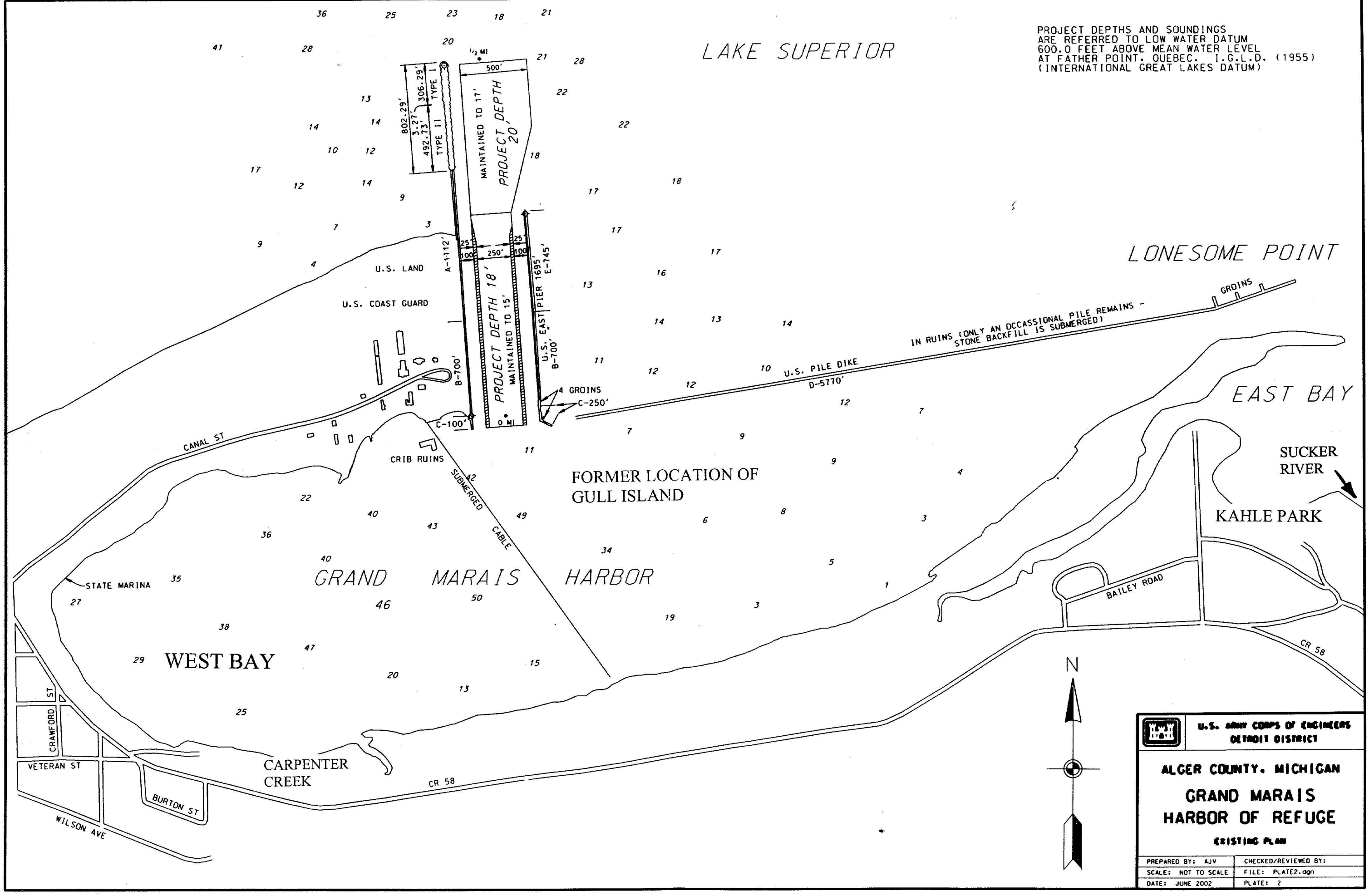
PROJECT DEPTHS AND SOUNDINGS
ARE REFERRED TO LOW WATER DATUM
600.0 FEET ABOVE MEAN WATER LEVEL
AT FATHER POINT, QUEBEC. I.G.L.D. (1955)
(INTERNATIONAL GREAT LAKES DATUM)
LAKE SUPERIOR
LONESOME POINT
EAST BAY
GRAND MARAIS HARBOR
WEST BAY
FORMER LOCATION OF
GULL ISLAND
SUCKER
RIVER
KAHLE PARK
CARPENTER
CREEK
U.S. LAND
U.S. COAST GUARD
CRIB RUINS
CANAL ST
STATE MARINA
CRAWFORD ST
VETERAN ST
WILSON AVE
BURTON ST
CR 58
BAILEY ROAD
SUBMERGED CABLE
U.S. PILE DIKE
D-5770'
IN RUINS (ONLY AN OCCASSIONAL PILE REMAINS - STONE BACKFILL IS SUBMERGED)
GROINS
4 GROINS
C-250'
C-100'
B-700'
A-1112'
U.S. EAST PIER 1695'
B-700'
E-745'
PROJECT DEPTH 18'
MAINTAINED TO 15'
PROJECT DEPTH 20'
MAINTAINED TO 17'
802.29'
306.29'
3.27'
492.73'
TYPE I
TYPE II
500'
250'
25'
100'
0 MI
1/2 MI
N
U.S. ARMY CORPS OF ENGINEERS
DETROIT DISTRICT
ALGER COUNTY, MICHIGAN
GRAND MARAIS
HARBOR OF REFUGE
EXISTING PLAN
PREPARED BY: AJV
CHECKED/REVIEWED BY:
SCALE: NOT TO SCALE
FILE: PLATE2.dgn
DATE: JUNE 2002
PLATE: 2

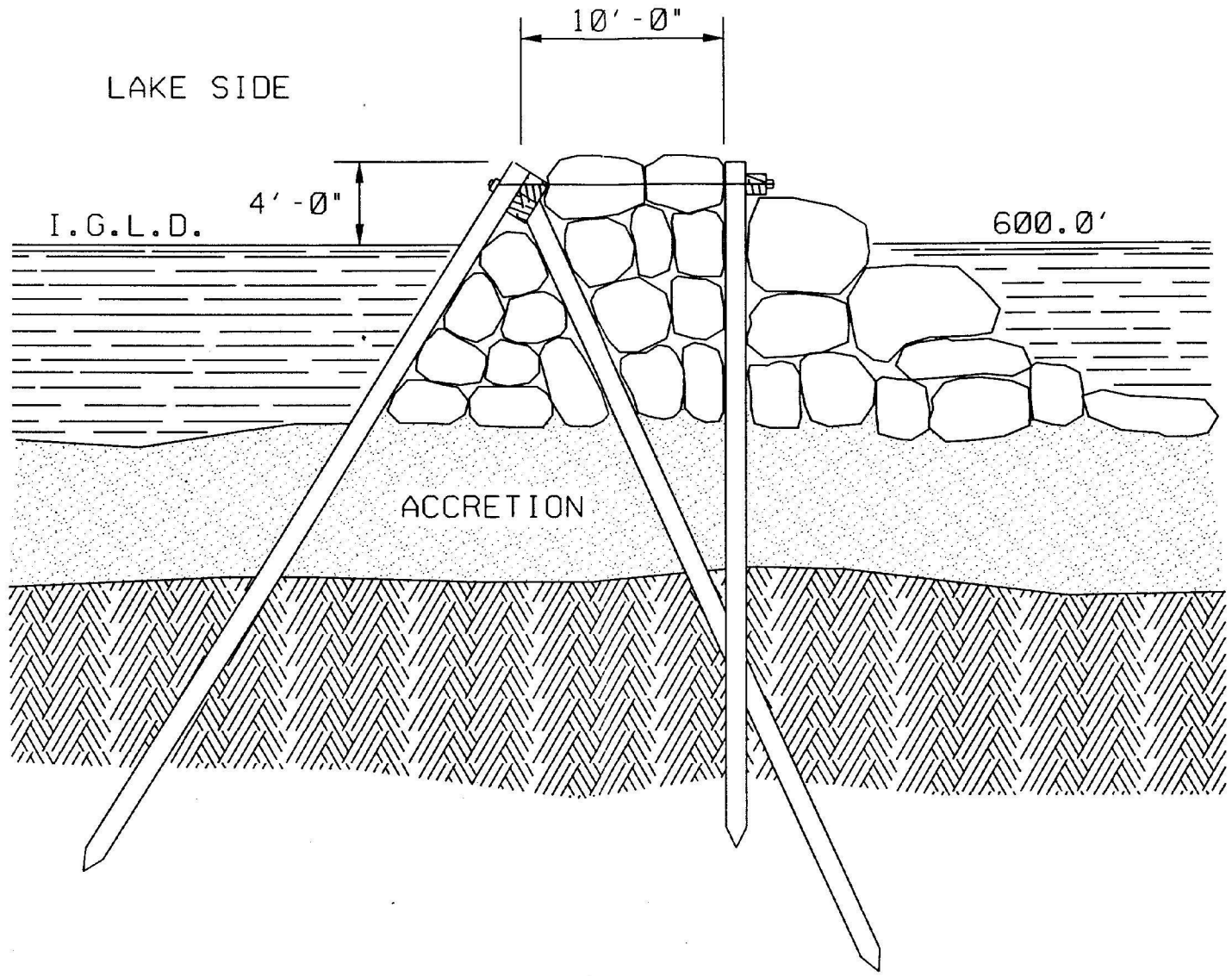

SCALE: 1" = 8'

8' 0 8'

PILE DIKE

BUILT: TIMBER STRUCTURE 1895-8
ROCK REINFORCEMENT 1905-07

U.S. ARMY CORPS OF ENGINEERS
DETROIT DISTRICT

ALGER COUNTY, MICHIGAN

GRAND MARAIS
HARBOR OF REFUGE

EXISTING CROSS SECTION

PREPARED BY: AJV	CHECKED/REVIEWED BY:
SCALE: 1" = 8'	FILE: PLATE3.dgn
DATE: JUNE 2002	PLATE: 3

PROJECT DEPTHS AND SOUNDINGS
ARE REFERRED TO LOW WATER DATUM
600.0 FEET ABOVE MEAN WATER LEVEL
AT FATHER POINT, QUEBEC. I.G.L.D. (1955)
(INTERNATIONAL GREAT LAKES DATUM)

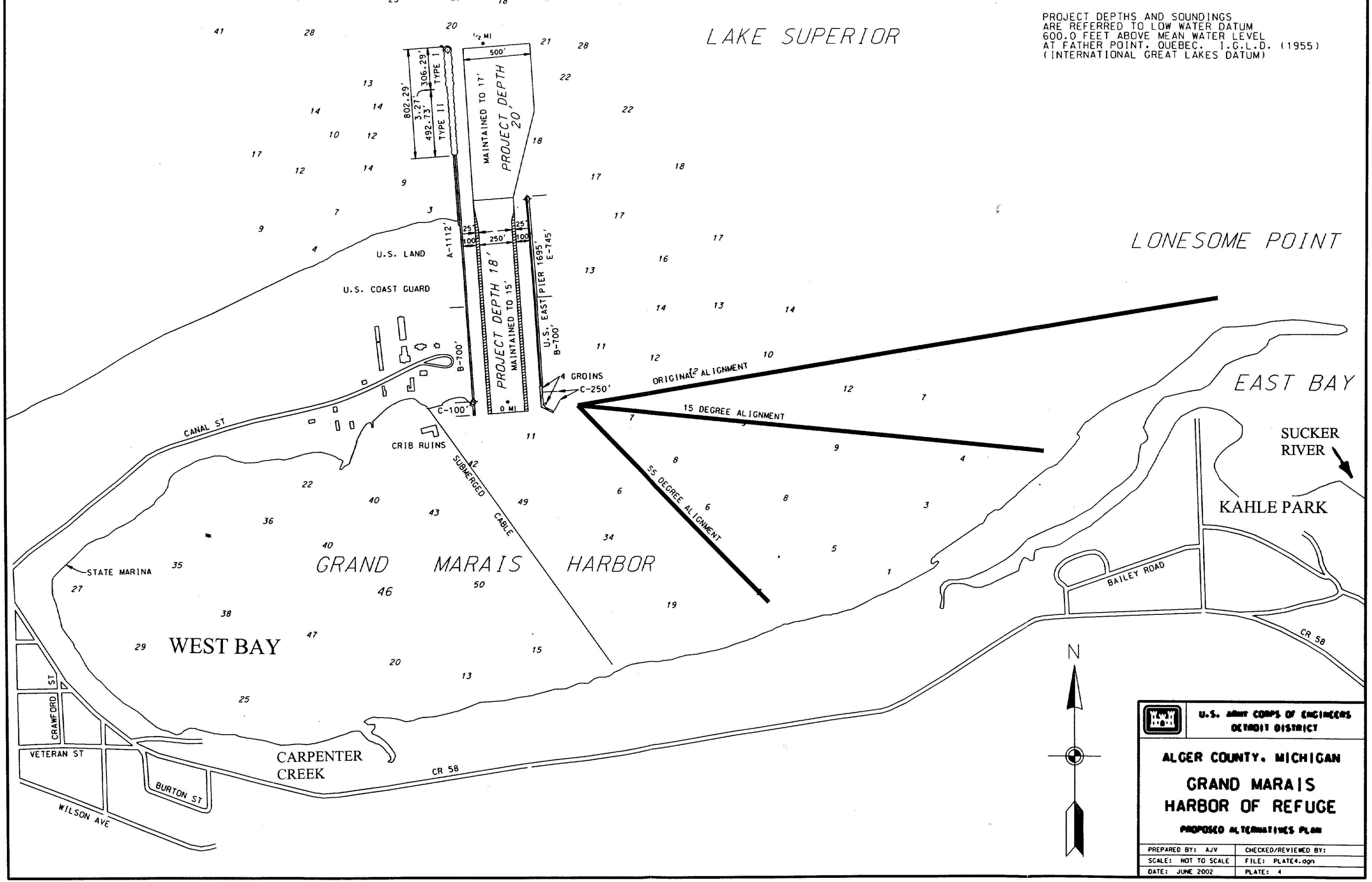

U.S. ARMY CORPS OF ENGINEERS
DETROIT DISTRICT

ALGER COUNTY, MICHIGAN

GRAND MARAIS
HARBOR OF REFUGE

PROPOSED ALTERNATIVES PLAN

PREPARED BY: AJV	CHECKED/REVIEWED BY:
SCALE: NOT TO SCALE	FILE: PLATE4.dgn
DATE: JUNE 2002	PLATE: 4

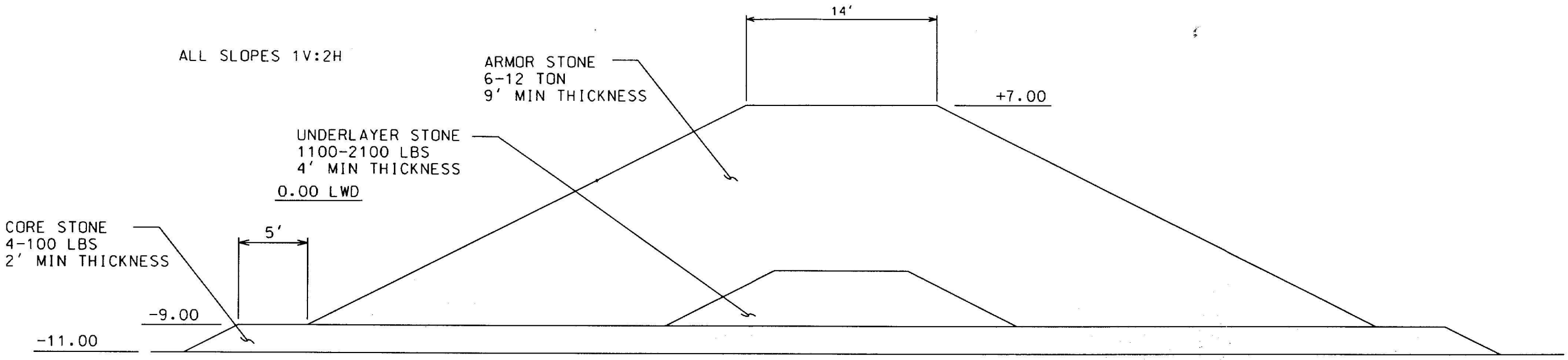

ORIGINAL ALIGNMENT CROSS SECTION

SCALE: 1/8" = 1'

U.S. ARMY CORPS OF ENGINEERS
DETROIT DISTRICT

ALGER COUNTY, MICHIGAN

GRAND MARAIS
HARBOR OF REFUGE

ORIGINAL ALIGNMENT CROSS SECTION

PREPARED BY: MP/HC	CHECKED/REVIEWED BY:
SCALE: AS SHOWN	FILE: PLATE5.DGN

DATE: JUNE 2002 PLATE: 5

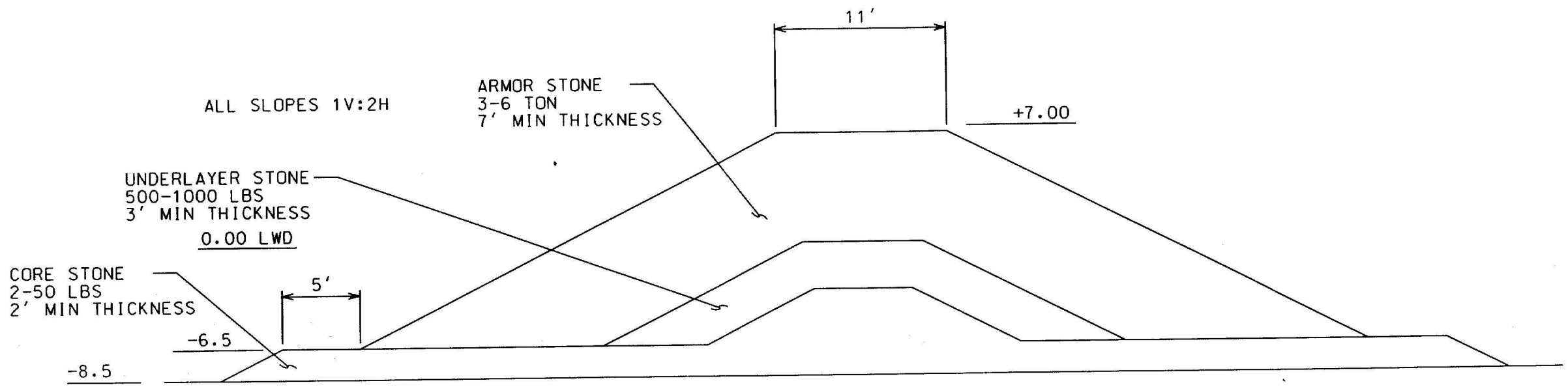

15-DEGREE ALIGNMENT CROSS SECTION

SCALE: 1/8" = 1'

U.S. ARMY CORPS OF ENGINEERS
DETROIT DISTRICT

ALGER COUNTY, MICHIGAN

GRAND MARAIS
HARBOR OF REFUGE

15-DEGREE ALIGNMENT CROSS SECTION

PREPARED BY: MP/HC	CHECKED/REVIEWED BY:
SCALE: AS SHOWN	FILE: PLATE6.DGN
DATE: JUNE 2002	PLATE: 6

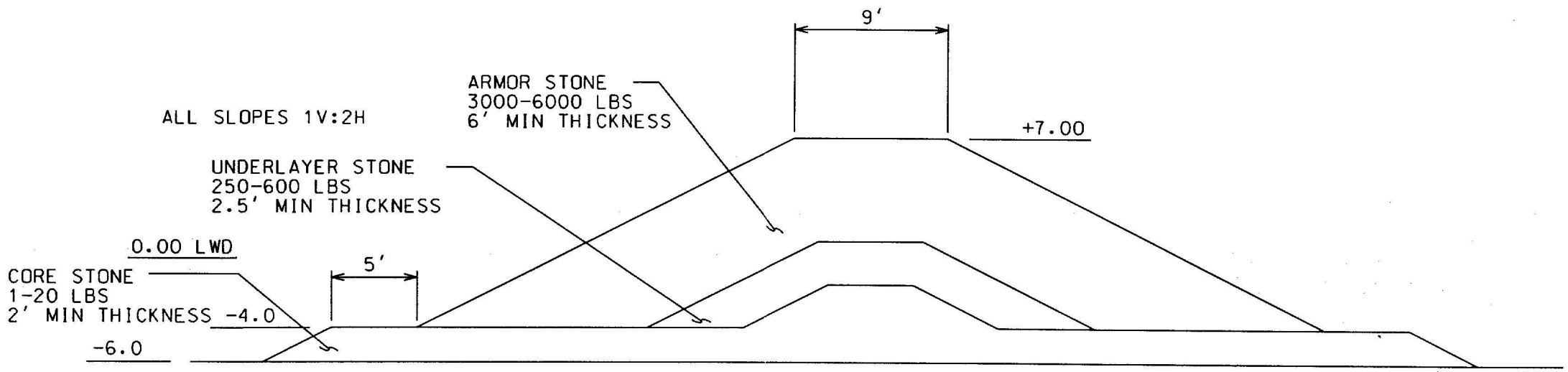

55-DEGREE ALIGNMENT CROSS SECTION

SCALE: 1/8" = 1'

U.S. ARMY CORPS OF ENGINEERS
DETROIT DISTRICT

ALGER COUNTY, MICHIGAN

GRAND MARAIS
HARBOR OF REFUGE

55-DEGREE ALIGNMENT CROSS SECTION

PREPARED BY: MP/HC	CHECKED/REVIEWED BY:
SCALE: AS SHOWN	FILE: PLATE7.DGN
DATE: JUNE 2002	PLATE: 7